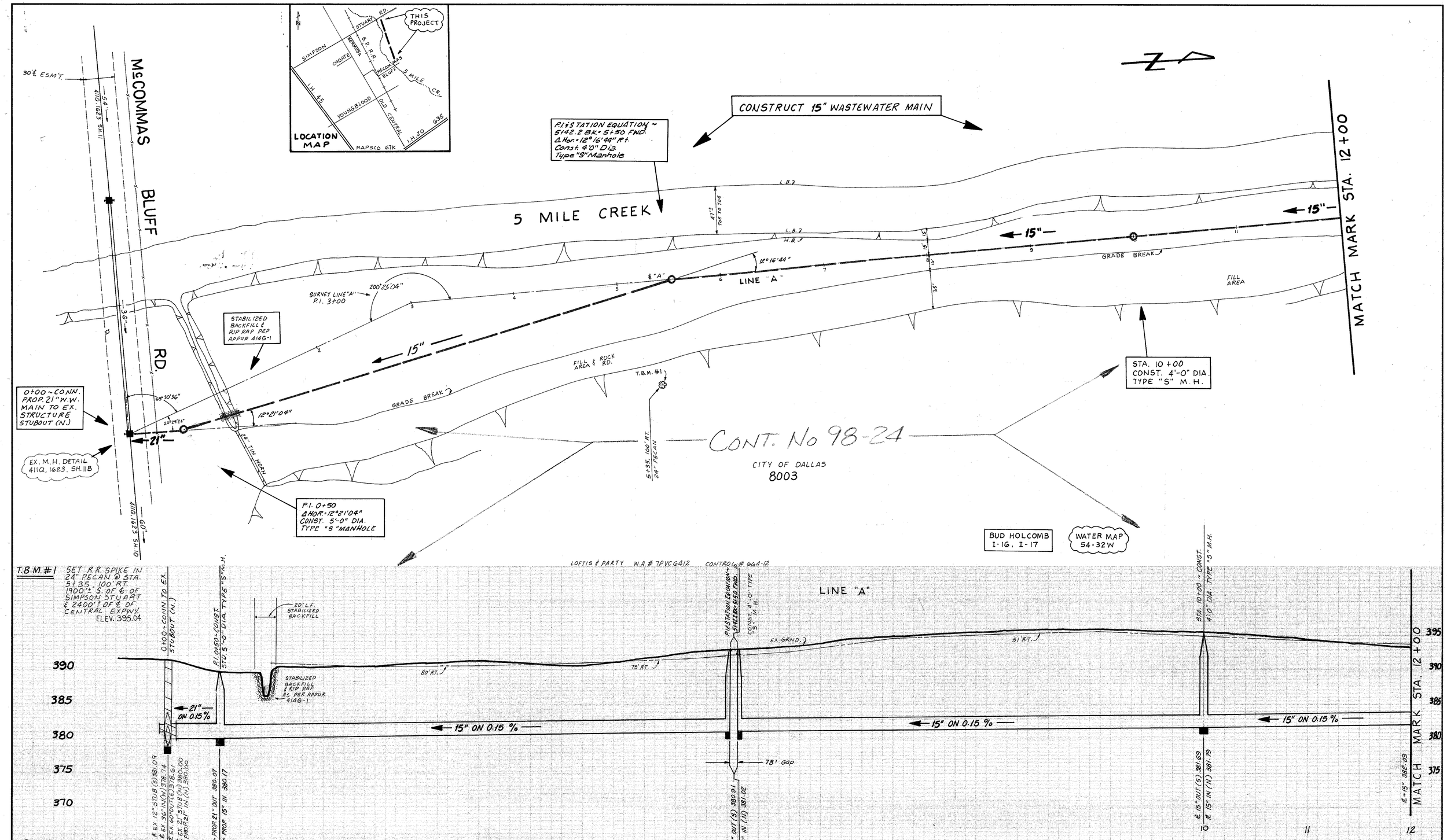

15" WASTEWATER MAIN
ALONG 5 MILE CR. FROM SIMPSON STUART RD. TO McCOMMAS BLUFF
WATER UTILITIES DEPARTMENT
CITY OF DALLAS, TEXAS

DESIGN	DRAWN	DATE	SCALE	NOTES	FILE	NO.
J. ROGERS D. STOVER	D. STOVER	JULY 1995	1"=40' H. 1"=6' V.	LOFTIS #664-12	411Q	1623

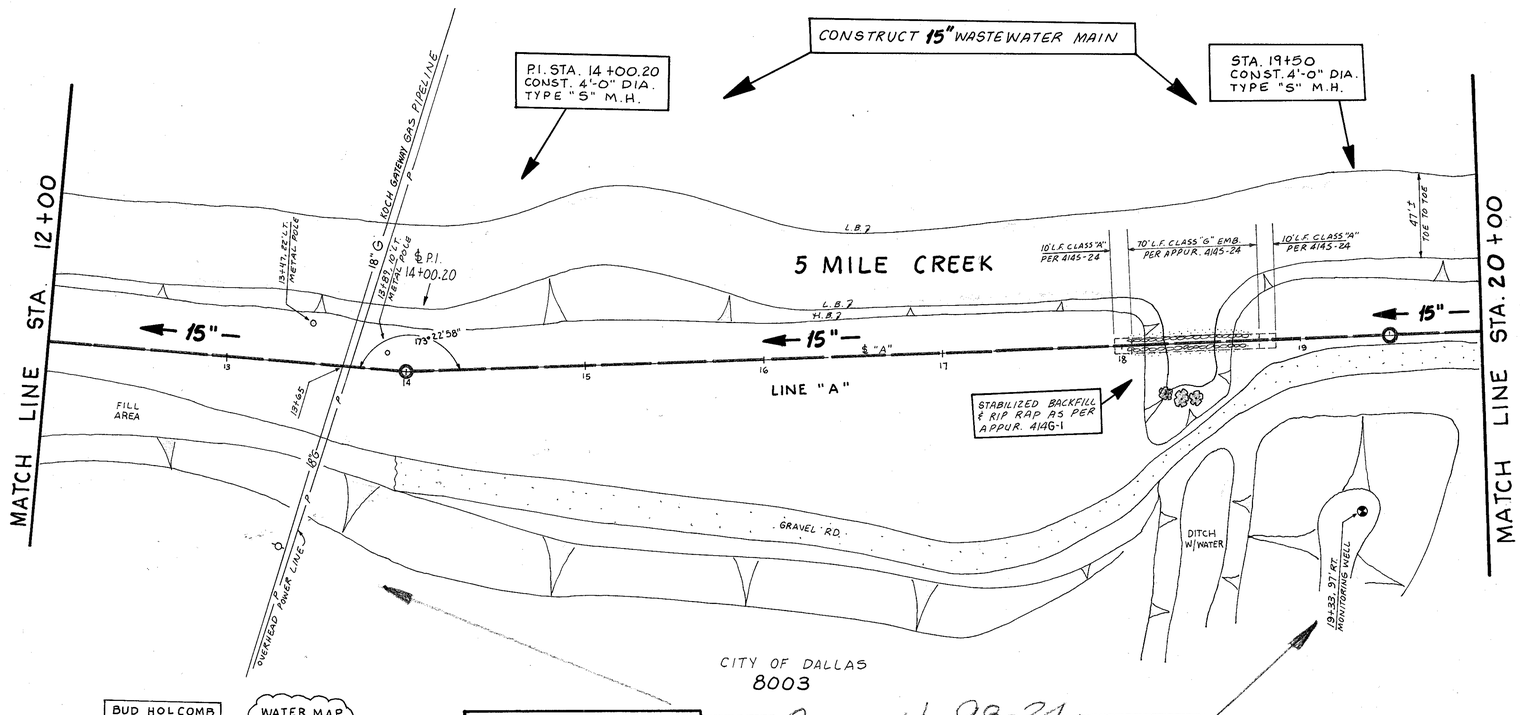

B.M. STD. W.D.B.M. IN W. CONC. HEADWALL TO A 2'X8'X12' CONC. BOX CULVERT UNDER CENTRAL EXPWY. AND SIMPSON STUART RD. ELEV. 404.74

B.M. STD. W.D.B.M. ON CONC. RADIUS OF MEDIAN STRIP IN CENTRAL EXPWY. AND N. PROPERTY LINE OF CHOTE RD. ELEV. 405.24

800 L.F. 15" WASTEWATER PIPE
ASTM D3034 (SDR-35), ASTM 789, ASTM 794 / D3212
CLASS "B-2" EMBEDMENT (EXCEPT AS NOTED)

STATE OF TEXAS
STEPHEN L. HARDY
48699
REGISTERED PROFESSIONAL ENGINEER
5/8/98

Contract 98-24

15

15" WASTEWATER MAIN
ALONG 5 MILE CR. FROM SIMPSON STUART RD. TO McCOMMAS BLUFF
WATER UTILITIES DEPARTMENT
CITY OF DALLAS, TEXAS

DESIGN	DRAWN	DATE	SCALE	NOTES	FILE	NO.
J. ROGERS D. STOVER	D. STOVER	JULY 1995	1"=40' H. 1"=6' V.	LOFTIS #664-12	411Q	1623

804868
ARCHIVE SUPPLIES

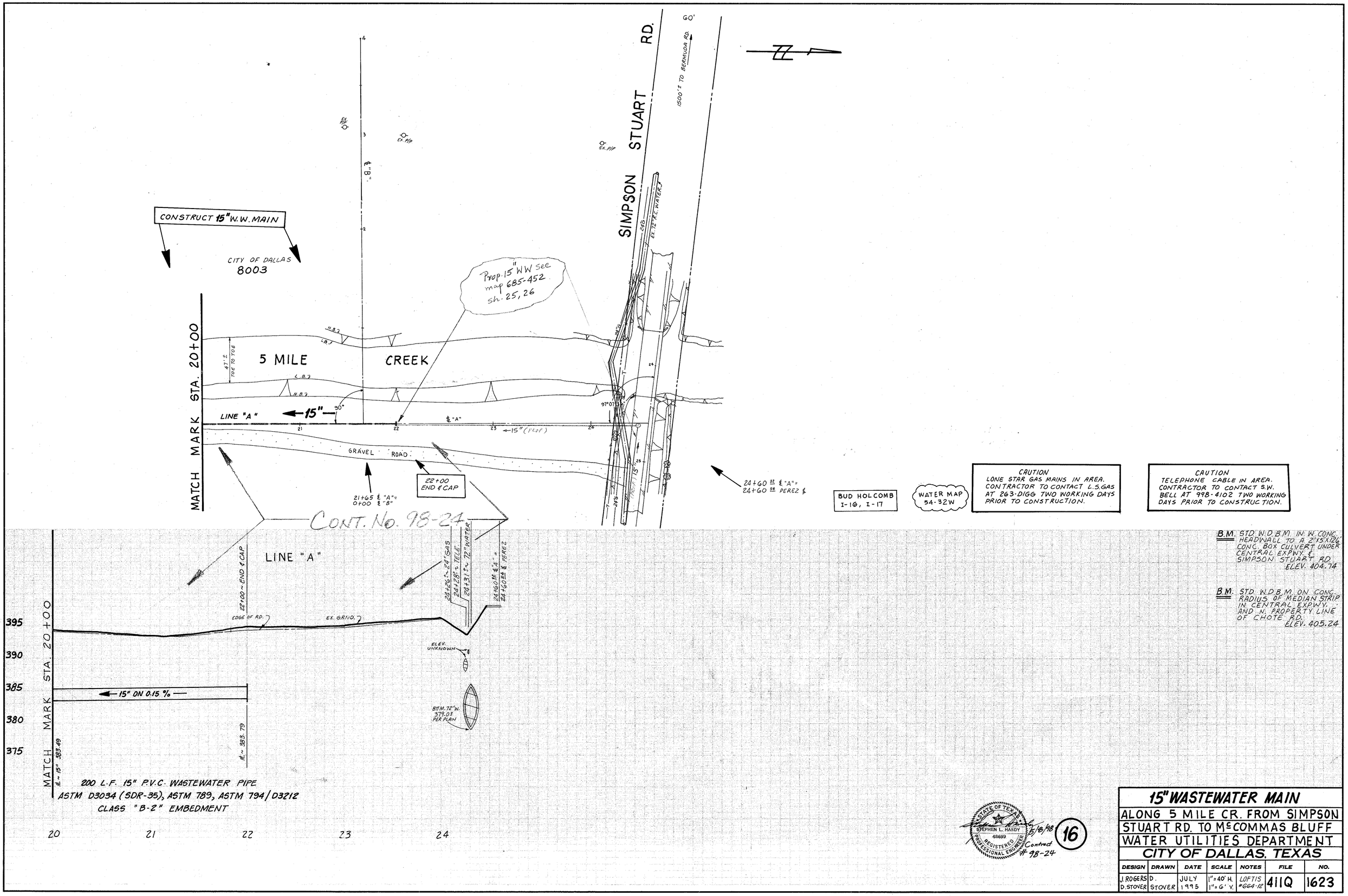

SIMPSON STUART RD.
1500'± TO BERMUDA RD.
60'
CONSTRUCT 15" W.W. MAIN
CITY OF DALLAS
8003
Prop. 15" WW see map 685-452 sh. 25, 26
5 MILE CREEK
MATCH MARK STA. 20+00
LINE "A"
15"
GRAVEL ROAD
22+00 END & CAP
21+65 ℄ "A" = 0+00 ℄ "B"
24+60 ℄ "A" = 24+60 ℄ PEREZ ℄
CONT. No. 98-24
LINE "A"
22+00 ~ END & CAP
EDGE OF RD.
EX. GRND.
ELEV. UNKNOWN
BTM. 72" W. 379.0± PER PLAN
15" ON 0.15 %
MATCH MARK STA. 20+00
395
390
385
380
375
200 L.F. 15" P.V.C. WASTEWATER PIPE
ASTM D3034 (SDR-35), ASTM 789, ASTM 794/D3212
CLASS "B-2" EMBEDMENT
20
21
22
23
24
BUD HOLCOMB
I-16, I-17
WATER MAP
54-32W
CAUTION
LONE STAR GAS MAINS IN AREA. CONTRACTOR TO CONTACT L.S.GAS AT 263-DIGG TWO WORKING DAYS PRIOR TO CONSTRUCTION.
CAUTION
TELEPHONE CABLE IN AREA. CONTRACTOR TO CONTACT S.W. BELL AT 998-4102 TWO WORKING DAYS PRIOR TO CONSTRUCTION.
B.M. STD. W.D.B.M. IN W. CONC. HEADWALL TO A 2'X5'X126' CONC. BOX CULVERT UNDER CENTRAL EXPWY. & SIMPSON STUART RD. ELEV. 404.74
B.M. STD. W.D.B.M. ON CONC. RADIUS OF MEDIAN STRIP IN CENTRAL EXPWY. AND N. PROPERTY LINE OF CHOTE RD. ELEV. 405.24
STATE OF TEXAS
STEPHEN L. HARDY
48699
REGISTERED PROFESSIONAL ENGINEER
5/8/98
Contract #98-24
16
15" WASTEWATER MAIN
ALONG 5 MILE CR. FROM SIMPSON STUART RD. TO McCOMMAS BLUFF
WATER UTILITIES DEPARTMENT
CITY OF DALLAS, TEXAS
DESIGN J. ROGERS D. STOVER
DRAWN D. STOVER
DATE JULY 1995
SCALE 1"=40' H. 1"=6' V.
NOTES LOFTIS #664-12
FILE 411Q
NO. 1623

66" WASTEWATER RELOCATION
McCOMMAS LANDFILL

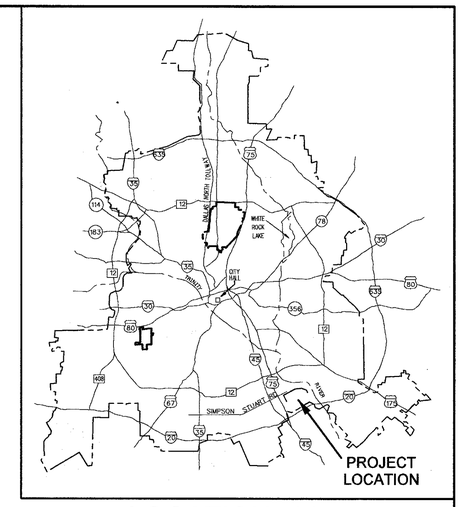

LOCATION MAP

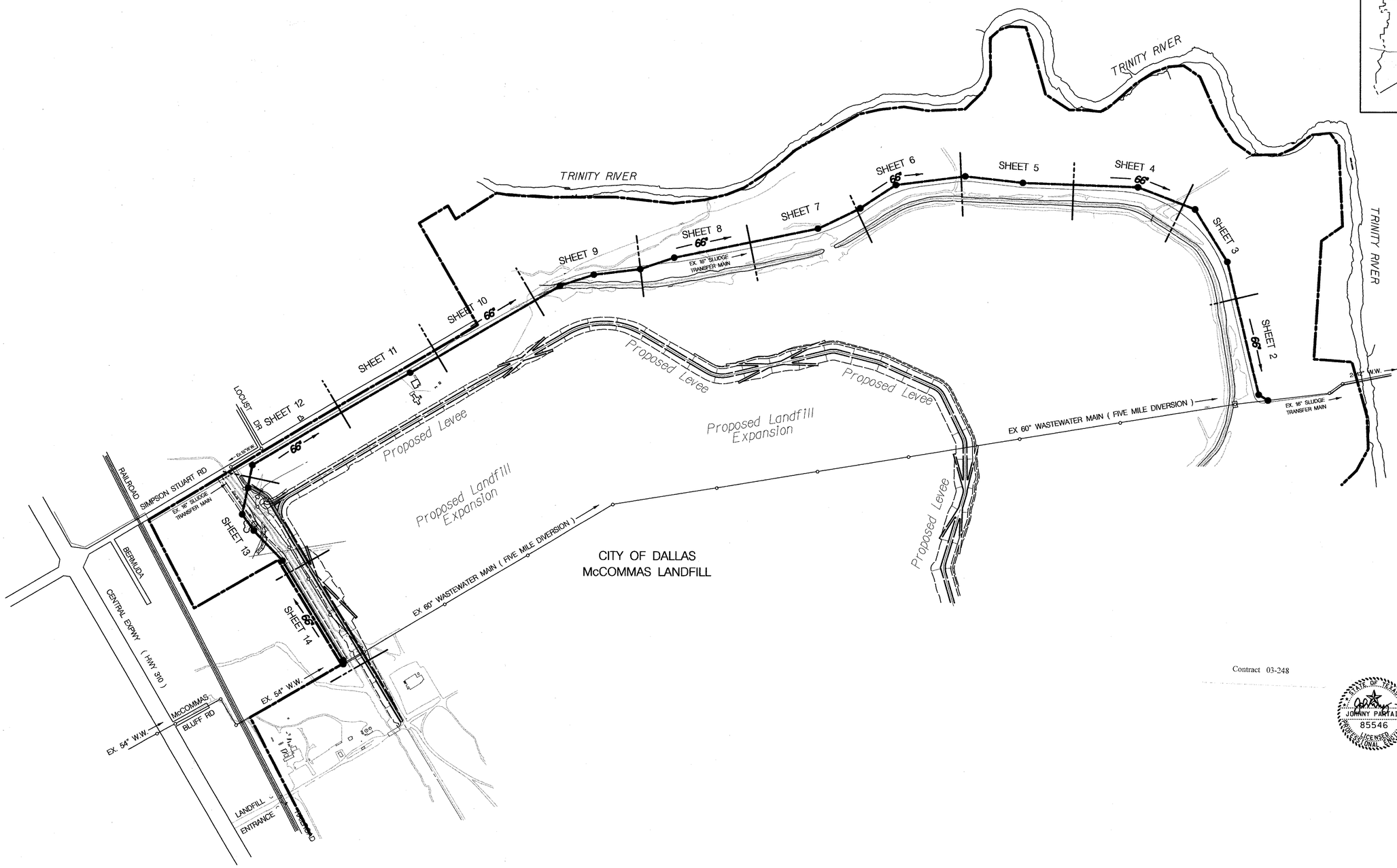

Contract 03-248

STATE OF TEXAS
JOHNNY PARTAIN
85546
LICENSED
PROFESSIONAL ENGINEER
12/3/03

1

411Q – 1623C

remote/wastewater/McCommas/allignment/Q1623CSht.dgn

CONSTRUCT 66" WASTEWATER MAIN

0+16.95
Construct Special Vented Manhole
as per detail sheet 15.
Connect to Ex.60" WW Pipe (NE)
Plug Ex.60" WW.(W.)
(N=6938688.01 E=2523877.66)

P.I.~ 1+33.85 Δ=45°7'42.07" (Right)
Construct Special 8' Dia. Pressure-Type
Manhole, As Per Detail Sht. 17.
(N=6938758.33 E=2523763.59)

MARSH AREA

10" Cluster Willow

8" Willow

Cluster Willow

66"

20' Elm

6' Cottonwood

223+00 Survey Line
Proposed Soil Boring

228+00 Survey Line
Proposed Soil Boring

233+00 Survey Li
Proposed Soil Boring

MATCH MARK 12+00

12+00 11+00 10+00 9+00 8+00 7+00 6+00 5+00 4+00 3+00 2+00

Proposed Fill Per Detail See Sheet 18

370+00 — Ex.16" WW Force Main (4520-19J Sht 82) — 375+00

MARSH AREA

Ex.60" WW (4110-1623 Sht 2)

POND WSE 382.9

POND WSE 382.9

LEVEE AGRICULTURAL LEVEE AGRICULTURAL LEVEE AGRICULTURAL LEVEE

ABANDON EX.
60" WASTEWATER MAIN

100 yr Flood~402'

Ex.Groundline

Ex.Groundline

FILL

66" On 0.034%

1+33.85 Construct Special 8' Dia. Pressure-Type M.H.

Construct M.H. Top To 3' Above Finished Grade

0+16.95 Construct Special Vented Manhole as Per Detail Sheet 15

Construct Vent To 2' Above 100 Flood

FL-Prop 66" WW (In)~ 373.16
FL-Ex 60" WW (In)~
FL-Ex. 60" WW. (Out)~

FL-Prop 66" WW (In)~ 373.20
FL-Prop 66" WW (Out)~ 373.20

FL-Prop 66" WW~ 373.56

395 390 385 380 375 370 365

MATCH MARK 12+00

1183 L.F. 66" R.C.P. ASTM C 76, Wastewater Pipe
Pipe Class IV, Wall B, with 300" PVC Liner
ASTM C 361 Joints with Steel End Rings
Class "G" Embedment (Unless Noted Otherwise)
Alternate:
1183 L.F. 66" R.T.R.P. ASTM D 3262, (Min Stiffness 46psi) WW Pipe
ASTM D 4161 Joints
Class "G" Embedment (Unless Noted Otherwise)

Contract 03-248

STATE OF TEXAS
JOHNNY PARTAIN
85546
LICENSED PROFESSIONAL ENGINEER
Johnny Partain 12/3/03

B.M. Set Cut "X" On N. Rim Of W.W.M.H. 18' W. Of Original P.W. Preliminary Base Line Sta. 77+13.90 ELEV. 392.74

B.M. Found Cut "X" On Top Of 12"x12" Junction Box Over Existing Wastewater Ø Existing Levee ELEV. 392.22

B.M. Found Cut "X" On N. Rim Of Storm M.H. 42' S. & 24' W. Of Original P.W. Preliminary Base Line Ø Sta. 77+00 ELEV. 394.73

12+00 11+00 10+00 9+00 8+00 7+00 6+00 5+00 4+00 3+00 2+00 1+00 0+00

remote/wastewater/McCommas/alignment/QI623CSh2.dgn

(2)

66" WASTEWATER MAIN RELOCATION
BORDERING McCOMMAS LANDFILL LEVEE
EAST of US 75 TO WEST of TRINITY RIVER
DALLAS WATER UTILITIES DEPARTMENT
CITY OF DALLAS, TEXAS

DESIGN	DRAWN	DATE	SCALE	NOTES	FILE	NO.
W.Turner C.Kopecki	W.Turner C.Kopecki J.Bernard	Dec 03	1"=40' Horz 1"=6' Vert	Public Works	4110	1623C

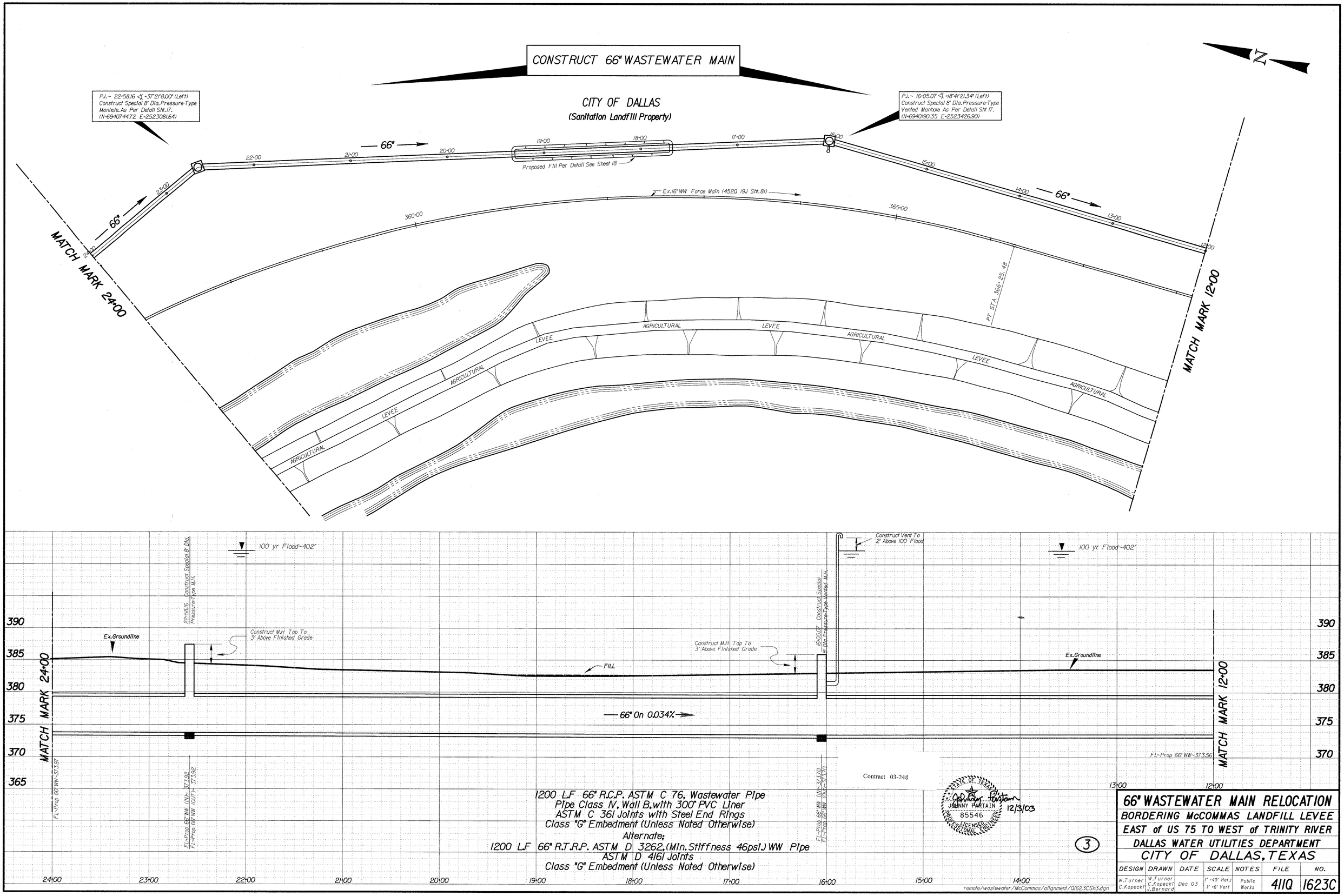

66" WASTEWATER MAIN RELOCATION						
BORDERING McCOMMAS LANDFILL LEVEE						
EAST of US 75 TO WEST of TRINITY RIVER						
DALLAS WATER UTILITIES DEPARTMENT						
CITY OF DALLAS, TEXAS						
DESIGN	DRAWN	DATE	SCALE	NOTES	FILE	NO.
W. Turner C. Kopecki	W. Turner C. Kopecki J. Bernard	Dec 03	1" =40' Horz 1" =6' Vert	Public Works	411Q	1623C

CONSTRUCT 66" WASTEWATER MAIN

P.I.~ 29+11.26 ∠ =18°40'4.44" (Left)
Construct Special 8' Dia. Pressure-Type
Vented Manhole As Per Detail Sht.17.
(N-6949097.5.97 E-2522470.86)

MATCH MARK 36+00

MATCH MARK 24+00

66"

Ex.16" WW Force Main (4520-19J Sht 80)

60 Lin.Ft.Dry Rip-Rap Type "A" See Detail Sht 18

Cap Fill Area With Dry Rip-Rap Type "A" To Elevation 383.00

25+15

24+55

POND WE 384

POND WE 381.9

AGRICULTURAL

LEVEE

100 yr Flood~402'

Construct Vent To 2' Above 100 Flood

P.I.~ 29+11.26 Construct Special 8' Dia. Pressure-Type Vented M.H.

Construct M.H. Top To 3' Above Finised Grade

Ex. Ground line

66" On 0.034%

FL-Prop 66" WW~374.38

FL-Prop 66" WW (IN)~374.14

FL-Prop 66" WW (OUT)~374.14

FL-Prop 66" WW~373.97

1200 L.F 66" R.C.P. ASTM C 76, Wastewater Pipe
Pipe Class IV, Wall B, with 300" PVC Liner
ASTM C 361 Joints with Steel End Rings
Class "G" Embedment (Unless Noted Otherwise)
Alternate;
1200 L.F 66" R.T.R.P. ASTM D 3262, (Min. Stiffness 46psi.) WW Pipe
ASTM D 4161 Joints
Class "G" Embedment (Unless Noted Otherwise)

Contract 03-248

STATE OF TEXAS
JOHNNY PARTAIN
85546
LICENSED PROFESSIONAL ENGINEER

Johnny Partain 12/3/03

4

66" WASTEWATER MAIN RELOCATION

BORDERING McCOMMAS LANDFILL LEVEE
EAST of US 75 TO WEST of TRINITY RIVER
DALLAS WATER UTILITIES DEPARTMENT
CITY OF DALLAS, TEXAS

DESIGN	DRAWN	DATE	SCALE	NOTES	FILE	NO.
W.Turner C.Kopecki	W.Turner C.Kopecki J.Bernard	Dec 03	1"=40' Horz 1"=6' Vert	Public Works	4110	1623C

remote/wastewater/McCommas/allgnment/01623CSht4.dgn

CONSTRUCT 66" WASTEWATER MAIN

P.I.~ 47+62.55 ∠=13°54'32.08" (Left)
Construct Special 8' Dia. Pressure-Type Manhole. As Per Detail Sheet 17.
(N=6941091.10 E=2520624.41)

P.I.~ 41+41.71 ∠=4°29'20.95" (Right)
Construct Special 8' Dia. Pressure-Type Vented Manhole As Per Detail Sht 17.
(N=6941020.31 E=6941020.31)

MATCH MARK 48+00

MATCH MARK 36+00

48+00 47+00 46+00 45+00 66" 44+00 43+00 42+00 41+00 40+00 39+00 38+00 66" 37+00 36+00

335+00 340+00 345+00

Ex.16" WW Force Main (4520-19.1 Sht 79)

POND WE 384.7

POND WE 384.4

AGRICULTURAL LEVEE AGRICULTURAL LEVEE AGRICULTURAL LEVEE AGRICULTURAL LEVEE

N

47+62.55 Construct Special 8' Dia. Pressure-Type Manhole.

100 yr Flood~402'

Construct M.H. Top To 3' Above Finised Grade

Ex.Groundline

Construct Vent To 2' Above 100 Flood

4+41.71 Construct Special 8' Dia. Pressure-Type Vented Manhole.

100 yr Flood~402'

390 385 380 375 370

MATCH MARK 48+00

MATCH MARK 36+00

FL~Prop.66" WW~374.79

FL~Prop.66" WW (In) ~ 374.77
FL~Prop.66" WW (Out) ~ 374.74

66" On 0.034%

FL~Prop.66" WW (In) ~ 374.56
FL~Prop.66" WW (In) ~ 374.56

FL~Prop.66" WW~374.38

Class "A-I" Emb.- R.T.R.P.

Class "G" Emb.- R.T.R.P.

Class "G" Emb.- R.C.P.

48+00 47+00 46+00 45+00 44+00 43+00 42+00 41+00 40+00 39+00 38+00 37+00 36+00

1200 LF 66" R.C.P. ASTM C 76, Wastewater Pipe
Pipe Class IV, Wall B, with 300" PVC Liner
ASTM C 361 Joints with Steel End Rings
Class "C" Embedment (Unless Noted Otherwise)

Alternate;

1183 LF 66" R.T.R.P. ASTM D 3262, (Min. Stiffness 46psi) WW Pipe
ASTM D 4161 Joints
Class "B-2" Embedment (Unless Noted Otherwise)

Contract 03-248

STATE OF TEXAS
JOHNNY PARTAIN
85546
PROFESSIONAL ENGINEER
Johnny Partain 12/3/03

5

66" WASTEWATER MAIN RELOCATION

BORDERING McCOMMAS LANDFILL LEVEE

EAST of US 75 TO WEST of TRINITY RIVER

DALLAS WATER UTILITIES DEPARTMENT

CITY OF DALLAS, TEXAS

DESIGN	DRAWN	DATE	SCALE	NOTES	FILE	NO.
W.Turner C.Kopecki	W.Turner C.Kopecki J.Bernard	Dec 03	1"=40' Horz 1"=6' Vert	Public Works	4110	1623C

remote/wastewater/McCommas/alignment/01623C5h5.dgn

CONSTRUCT 66" WASTEWATER MAIN

P.I.~ 59+60.74 ∢=7°23'42.81" (Right)
Construct Special 8' Dia. Pressure-Type Manhole, As Per Detail Sht. 17.
(N=6940751.89 E=2519503.71)

P.I.~ 55+08.67 ∢=25°17'42.14" (Left)
Construct Special 8' Dia. Pressure-Type Vented Manhole As Per Detail Sht. 17.
(N=6939580.58 E=2520332.51)

MATCH MARK 60+00

MATCH MARK 48+00

66"

66"

325'-00

330'-00

Ex. 16" WW Force Main (4520-19.) Sht 77 & 78)

45 Lin. Ft. Dry Rip-Rap Type "A" See Detail Sht 18

Cap Fill Area With Dry Rip-Rap Type "A" To Elevation 384.00

AGRICULTURAL

LEVEE

AGRICULTURAL

LEVEE

AGRICULTURAL

N

59+60.74 Construct Special 8' Dia. Pressure-Type M.H.

55+08.67 Construct Special 8' Dia. Pressure-Type Vented M.H.

100 yr Flood~402'

Construct Vent To 2' Above 100 Flood

Construct M.H. Top To 3' Above Finished Grade

Construct M.H. Top To 3' Above Finished Grade

Ex. Ground Line

66" On 0.034% →

45 Lin. Ft. Dry Rip-Rap Type "A" See Detail Sht 18

Cap Fill Area With Dry Rip-Rap Type "A" To Elevation 384.00

48+70

48+25

Class "B" Embedment

FL~ Prop 66" WW ~ 375.19

FL~ Prop 66" WW (In) ~ 375.18

FL~ Prop 66" WW (Out) ~ 375.08

FL~ Prop 66" WW (In) ~ 375.03

FL~ Prop 66" WW (Out) ~ 375.03

FL~ Prop 66" WW ~ 374.79

390

385

380

375

370

60+00 59+00 58+00 57+00 56+00 55+00 54+00 53+00 52+00 51+00 50+00 49+00 48+00

1200 L.F. 66" R.C.P. ASTM C 76, Wastewater Pipe
Pipe Class IV, Wall B, with 300" PVC Liner
ASTM C 361 Joints with Steel End Rings
Class "C" Embedment (Unless Noted Otherwise)

Alternate;

1200 L.F. 66" R.T.R.P. ASTM D 3262, (Min. Stiffness 46psi.) WW Pipe
ASTM D 4161 Joints
Class "B-2" Embedment (Unless Noted Otherwise)

Contract 03-245

STATE OF TEXAS
JOHNNY PURTAIN
85546
LICENSED PROFESSIONAL ENGINEER

Johnny Purtain 12/3/03

6

remote/wastewater/McCommas/allgnment/01623CSh6.dgn

66" WASTEWATER MAIN RELOCATION

BORDERING McCOMMAS LANDFILL LEVEE
EAST of US 75 TO WEST of TRINITY RIVER
DALLAS WATER UTILITIES DEPARTMENT
CITY OF DALLAS, TEXAS

DESIGN	DRAWN	DATE	SCALE	NOTES	FILE	NO.
W.Turner C.Kopecki	W.Turner C.Kopecki J.Bernard	Dec 03	1"=40' Horz 1"=6' Vert	Public Works	4110	1623C

CONSTRUCT 66" WASTEWATER MAIN

P.I.~ 64+60.72 Δ=13°46'40.39" (Right)
Construct Special 8' Dia. Pressure-Type Vented Manhole As Per Detail Sht. 17.
(N=6940538.54 E=2519051.51)

MATCH MARK 72+00

MATCH MARK 60+00

N

72+00 71+00 70+00 69+00 66" 68+00 67+00 66+00 65+00 64+00 63+00 66" 62+00 61+00 60+00

Proposed Fill Per Detail See Sheet 18

310+00 315+00 320+00

20" Pecan 12" Pecan 20" Pecan 15" Pecan 20" Pecan 20" Pecan 50" Pecan 36" Pecan 18" Pecan 20" Pecan 20" Pecan 18" Pecan 28" Pecan 25" Pecan 48" Pecan

WE 385.3

POND

WE 382.6

POND

Ex. 16" WW Force Main (4520-19) Sht 76 & 77

AGRICULTURAL LEVEE AGRICULTURAL LEVEE

AGRICULTURAL LEVEE AGRICULTURAL

100 yr Flood~402'

Construct Vent To 2' Above 100' Flood

Construct Special 8' Dia. Pressure-Type Vented M.H. @ 60+72

Construct M.H. Top To 3' Above Finished Grade

Ex. Groundline

FILL

66" On 0.034%

FL~ Prop 66" WW~375.19

Class "G" Emb.- R.T.R.P.

Class "G" Emb.- R.C.P.

Class "A-1" Emb.- R.T.R.P.

FL~ Prop 66" WW (IN)~375.35

FL~ Prop 66" WW (OUT)~375.35

FL~ Prop 66" WW~375.60

390 385 380 375 370 365

72+00 71+00 70+00 69+00 68+00 67+00 66+00 65+00 64+00 63+00 62+00 61+00 60+00

1200 L.F. 66" R.C.P. ASTM C 76, Wastewater Pipe
Pipe Class IV, Wall B, with 300" PVC Liner
ASTM C 361 Joints with Steel End Rings
Class "C" Embedment (Unless Noted Otherwise)

Alternate:

1200 L.F. 66" R.T.R.P. ASTM D 3262, (Min. Stiffness 46psi.) WW Pipe
ASTM D 4161 Joints
Class "B-2" Embedment (Unless Noted Otherwise)

Contract 03-248

STATE OF TEXAS
JOHNNY PARTAIN
85546
LICENSED PROFESSIONAL ENGINEER

Johnny Partain 12/3/03

7

remote/wastewater/McCommas/allgnment/01623CSht7.dgn

66" WASTEWATER MAIN RELOCATION

BORDERING McCOMMAS LANDFILL LEVEE

EAST of US 75 TO WEST of TRINITY RIVER

DALLAS WATER UTILITIES DEPARTMENT

CITY OF DALLAS, TEXAS

DESIGN	DRAWN	DATE	SCALE	NOTES	FILE	NO.
W.Turner C.Kopecki	W.Turner C.Kopecki J.Bernard	Dec 03	1" =40' Horz 1" =6' Vert	Public Works	4110	1623C

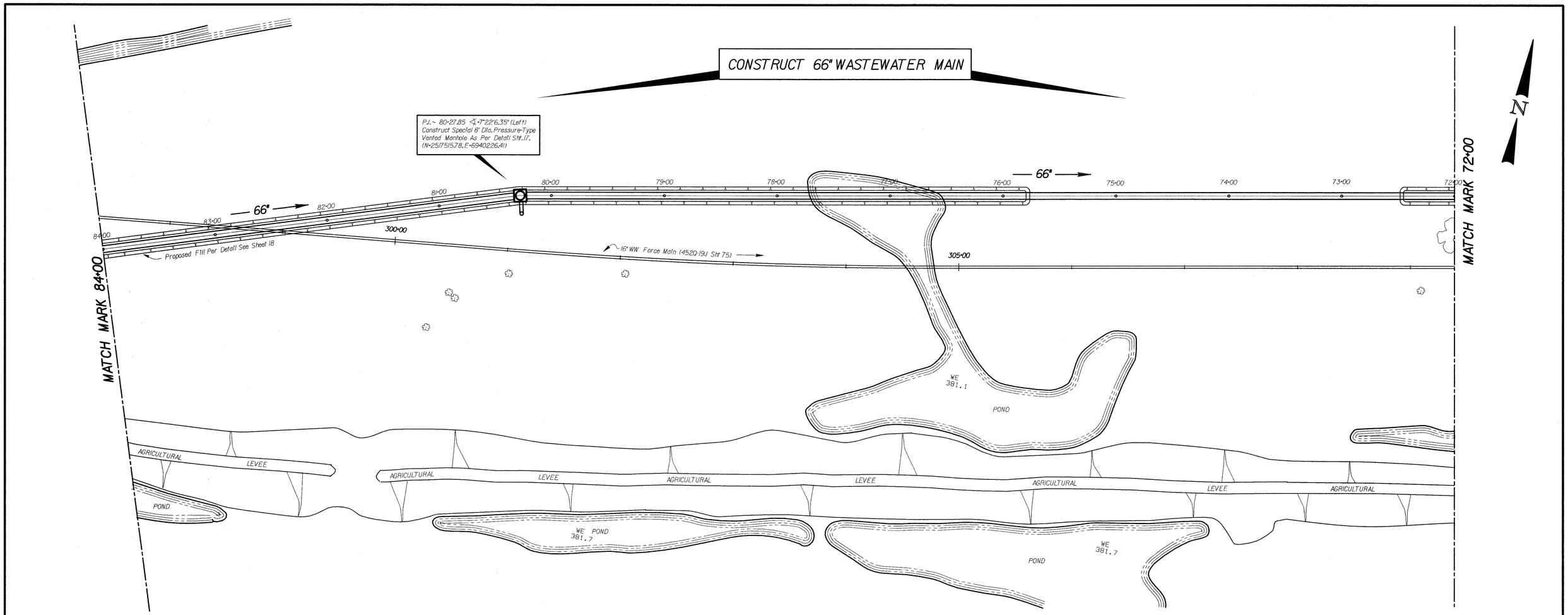

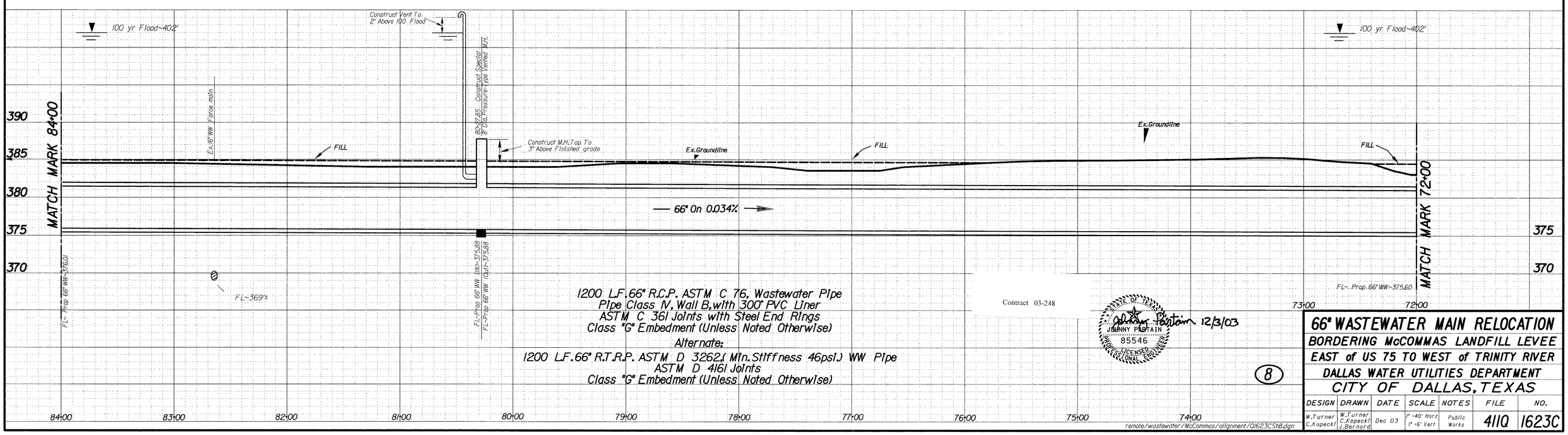

1200 L.F. 66" R.C.P. ASTM C 76, Wastewater Pipe
Pipe Class IV, Wall B, with 300" PVC Liner
ASTM C 361 Joints with Steel End Rings
Class "G" Embedment (Unless Noted Otherwise)

Alternate:

1200 L.F. 66" R.T.R.P. ASTM D 3262, (Min. Stiffness 46psi.) WW Pipe
ASTM D 4161 Joints
Class "G" Embedment (Unless Noted Otherwise)

Contract 03-248

STATE OF TEXAS
JOHNNY PARTAIN
85546
LICENSED
PROFESSIONAL ENGINEER
Johnny Partain 12/3/03

8

remote/wastewater/McCommas/alignment/Q1623CSh8.dgn

66" WASTEWATER MAIN RELOCATION						
BORDERING McCOMMAS LANDFILL LEVEE						
EAST of US 75 TO WEST of TRINITY RIVER						
DALLAS WATER UTILITIES DEPARTMENT						
CITY OF DALLAS, TEXAS						
DESIGN	DRAWN	DATE	SCALE	NOTES	FILE	NO.
W.Turner C.Kopecki	W.Turner C.Kopecki J.Bernard	Dec 03	1"=40' Horz 1"=6' Vert	Public Works	411Q	1623C

CONSTRUCT 66" WASTEWATER MAIN

MATCH MARK 96+00

MATCH MARK 84+00

P.I.~ 92+92.29 ∢ -12°27.05" (Left)
Construct Special 8' Dia. Pressure-Type Vented Manhole As Per Detail Sht. 17.
(N-6939921.71 E-2516295.14)

P.I.~ 89+11.04 ∢ -11°24'26.12" (Left)
Construct Special 8' Dia. Pressure-Type Manhole As Per Detail Sht. 17
(N-6940041.59 E-2516656.88)

P.I.~ 84+11.08 ∢ -11°51'23.39" (Right)
Construct Special 8' Dia. Pressure-Type Manhole As Per Detail Sht. 17.
(N-6940102.57 E-2517153.11)

PVI Sta. 289+00.00

Ex. 16" Sludge Force Main (4520-19J Sht 73 & 74)

72" R.C. WATER MAIN (685W-552 Sht 5)

24" STEEL GAS LINE

DIRT AUTOMOBILE TRAIL

Drainage Sump

POND

LEVEE

AGRICULTURAL

Addition Fill Zone

Proposed Fill Per Detail See Sheet 18

66"

WE 383.8

WE 386.8

WE 385.1

WE 393.3

N

Profile

100 yr. Flood~402'

Construct Vent To 2' Above 100 Flood

92+92.29 Construct Special 8' Dia. Pressure-Type Vented M.H.

Construct M.H. Top To 3' Above Finished grade

89+11.04 Construct Special 8' Dia. Pressure-Type Manhole

84+11.08 Construct Special 8' Dia. Pressure-Type Manhole

FILL

Ex. Groundline

66" On 0.034%

Class "B" Emb. For R.C.P.

Class "B-2" Emb. For R.T.R.P.

95+00

F.L.~ Prop 66" WW ~376.42

F.L.~ Prop 66" WW (IN)~376.31

F.L.~ Prop 66" WW (Out)~376.31

F.L.~ Prop 66" WW (IN)~376.18

F.L.~ Prop 66" WW (Out)~376.18

F.L.~ Prop 66" WW (IN)~376.01

F.L.~ Prop 66" WW (Out)~376.01

F.L.~ Prop 66" WW ~376.01

395 / 390 / 385 / 380 / 375

96+00 95+00 94+00 93+00 92+00 91+00 90+00 89+00 88+00 87+00 86+00 85+00 84+00

1200 L.F. 66" R.C.P. ASTM C 76, Wastewater Pipe
Pipe Class IV, Wall B, with 300" PVC Liner
ASTM C 361 Joints with Steel End Rings
Class "G" Embedment (Unless Noted Otherwise)

Alternate:

1200 L.F. 66" R.T.R.P. ASTM D 3262, (Min. Stiffness 46psi) WW Pipe
ASTM D 4161 Joints
Class "G" Embedment (Unless Noted Otherwise)

Contract 03-248

STATE OF TEXAS — JOHNNY PARTAIN — 85546 — LICENSED PROFESSIONAL ENGINEER

12/3/03

9

remote/wastewater/mccomas/alignment/sta_84-96a.dgn

66" WASTEWATER MAIN RELOCATION

BORDERING McCOMMAS LANDFILL LEVEE

EAST of US 75 TO WEST of TRINITY RIVER

DALLAS WATER UTILITIES DEPARTMENT

CITY OF DALLAS, TEXAS

DESIGN	DRAWN	DATE	SCALE	NOTES	FILE	NO.
W. Turner C. Kopecki	W. Turner C. Kopecki J. Bernard	Dec 03	1" =40' Horz 1" =6' Vert	Public Works	4110	1623C

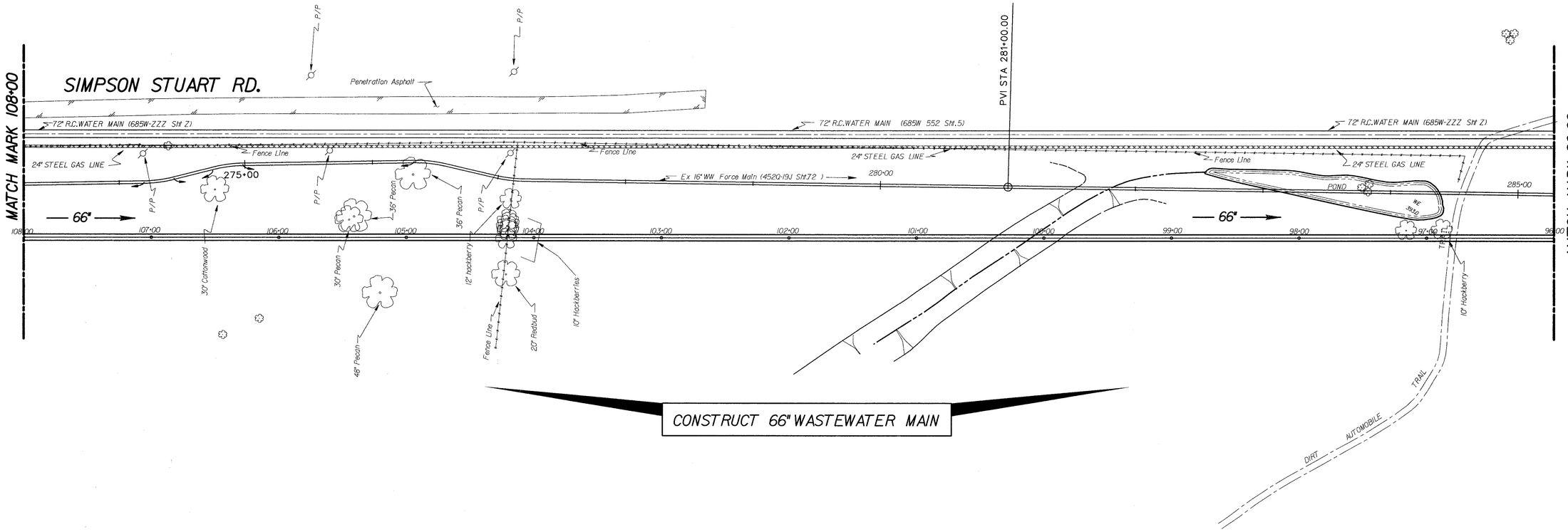

CONSTRUCT 66" WASTEWATER MAIN

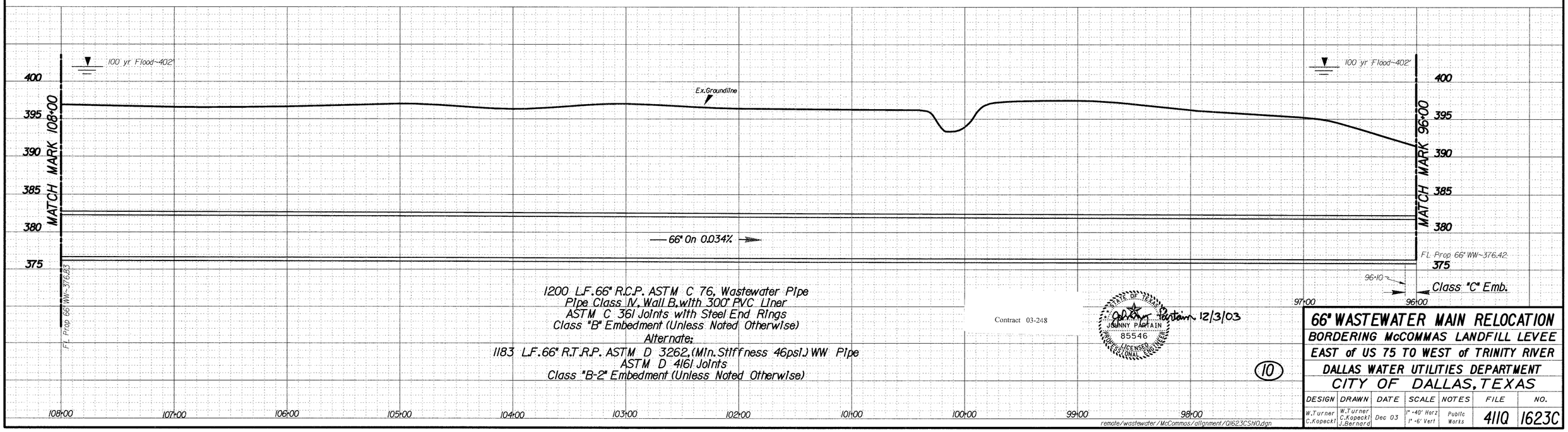

1200 L.F. 66" R.C.P. ASTM C 76, Wastewater Pipe
Pipe Class IV, Wall B, with 300" PVC Liner
ASTM C 361 Joints with Steel End Rings
Class "B" Embedment (Unless Noted Otherwise)
Alternate:
1183 L.F. 66" R.T.R.P. ASTM D 3262, (Min. Stiffness 46psi) WW Pipe
ASTM D 4161 Joints
Class "B-2" Embedment (Unless Noted Otherwise)

Contract 03-248

STATE OF TEXAS
JOHNNY PARTAIN
85546
LICENSED PROFESSIONAL ENGINEER
Johnny Partain 12/3/03

(10)

66" WASTEWATER MAIN RELOCATION

BORDERING McCOMMAS LANDFILL LEVEE

EAST of US 75 TO WEST of TRINITY RIVER

DALLAS WATER UTILITIES DEPARTMENT

CITY OF DALLAS, TEXAS

DESIGN	DRAWN	DATE	SCALE	NOTES	FILE	NO.
W.Turner C.Kopeckl	W.Turner C.Kopeckl J.Bernard	Dec 03	1" =40' Horz 1" =6' Vert	Public Works	4110	1623C

remote/wastewater/McCommas/alignment/Q1623CSh10.dgn

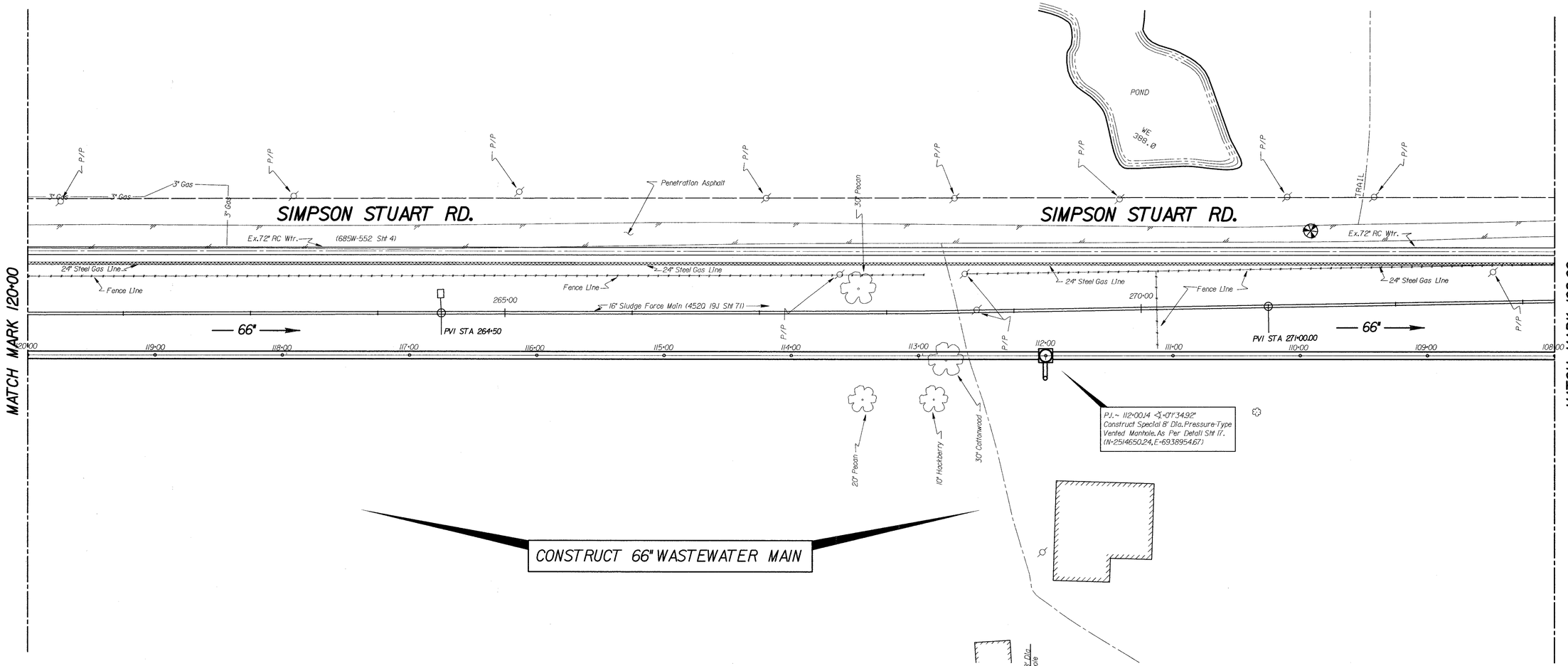

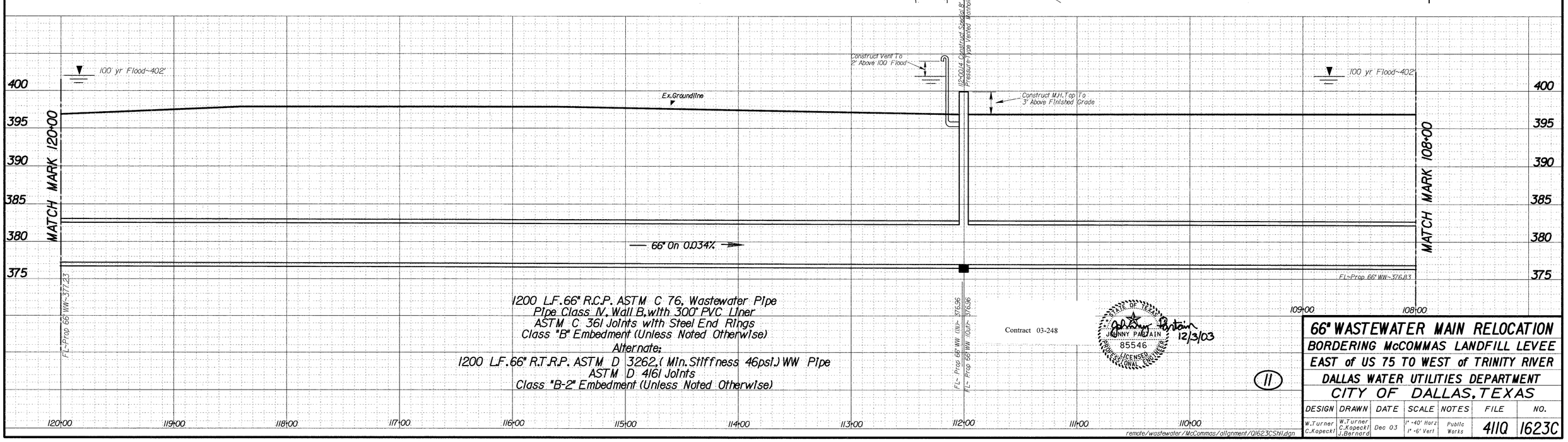

1200 L.F. 66" R.C.P. ASTM C 76, Wastewater Pipe
Pipe Class IV, Wall B, with 300' PVC Liner
ASTM C 361 Joints with Steel End Rings
Class "B" Embedment (Unless Noted Otherwise)

Alternate:

1200 L.F. 66" R.T.R.P. ASTM D 3262, (Min. Stiffness 46psi.) WW Pipe
ASTM D 4161 Joints
Class "B-2" Embedment (Unless Noted Otherwise)

Contract 03-248

STATE OF TEXAS
JOHNNY PAQUAIN
85546
LICENSED
PROFESSIONAL ENGINEER
12/3/03

11

66" WASTEWATER MAIN RELOCATION
BORDERING McCOMMAS LANDFILL LEVEE
EAST of US 75 TO WEST of TRINITY RIVER
DALLAS WATER UTILITIES DEPARTMENT
CITY OF DALLAS, TEXAS

DESIGN	DRAWN	DATE	SCALE	NOTES	FILE	NO.
W.Turner C.Kopecki	W.Turner C.Kopecki J.Bernard	Dec 03	1"=40' Horz 1"=6' Vert	Public Works	4110	1623C

remote/wastewater/McCommas/alignment/01623CSht1.dgn

LOCUST DR.

SIMPSON STUART RD.

N

Ex.12" Water

Side Walk

Ex.15" WW (4110-1623 Sht X)

24" RCP

Ex.72" RC Wtr1685W-552 Sht 3)

3" Gas

Penetration Asphalt

24" Steel Gas Line

Fence Line

16" Sludge Force Main (4520-19J Sht.70)

255+00

260+00

66"

130+00 129+00 128+00 127+00 126+00 125+00 124+00 123+00 122+00 121+00 120+00

MATCH MARK 120+00

Ex.15" WW (4110-1623 Sht X)

P.I.~ 131+00 ∆ =47°49'07" (Left)
Construct Special 8' Dia Pressure-Type Vented Manhole. As Per Detail Sht 17.
(N-6937991.09, E-2513011.84)

Dirt & Gravel Road

66"

132+00

130+00

MATCH MARK 133+00

Prop. Levee Access Road

CONSTRUCT 66" WASTEWATER MAIN

CITY OF DALLAS
(Sanitation Landfill Property)

Construct Vent To 2' Above 100 Flood

100 yr Flood~402'

Construct M.H. Top To 3' Above Finished Grade

131+00 Construct Special 8' Dia Pressure-Vented Manhole

Ex.Groundline

66" On 0.034% →

FL~ Prop 66" WW-377.67

FL-Prop 66" WW (In)-377.61

FL-Prop 66" WW (Out)-377.61

FL~ Prop 66" WW-377.23'

400 395 390 385 380 375

132+00 131+00 130+00 129+00 128+00 127+00 126+00 125+00 124+00 123+00 122+00 121+00

1300 L.F. 66" R.C.P. ASTM C 76, Wastewater Pipe
Pipe Class IV, Wall B, with 300° PVC Liner
ASTM C 361 Joints with Steel End Rings
Class "B" Embedment (Unless Noted Otherwise)
Alternate:
1300 L.F. 66" R.T.R.P. ASTM D 3262, (Min. Stiffness 46psi.) WW Pipe
ASTM D 4161 Joints
Class "B-2" Embedment (Unless Noted Otherwise)

Contract 03-248

STATE OF TEXAS
JOHNNY PORTAIN
85546
LICENSED PROFESSIONAL ENGINEER
12/3/03

(12)

66" WASTEWATER MAIN RELOCATION

BORDERING McCOMMAS LANDFILL LEVEE

EAST of US 75 TO WEST of TRINITY RIVER

DALLAS WATER UTILITIES DEPARTMENT

CITY OF DALLAS, TEXAS

DESIGN	DRAWN	DATE	SCALE	NOTES	FILE	NO.
W.Turner C.Kopecki	W.Turner C.Kopecki J.Bernard	Dec 03	1"=40' Horz 1"=6' Vert	Public Works	4110	1623C

remote/wastewater/McCommas/alignment/Q1623CSht2.dgn

CONSTRUCT 66" WASTEWATER MAIN

MATCH MARK 144+00

ORCHARD

P.I.~ 142+93.73 ◁=12°39'22.52" (Rt)
Construct Special 8' Dia. Pressure-Type Vented Manhole. As Per Detail Sht 17.
(N=6936970.90 E=2513335.01

66"

143+00

142+00

141+00

140+00

139+00

138+48.54 ◁=8°29'27.52" (Lt)
Construct Special 8' Dia Pressure-Type Manhole As Per Detail Sheet 17.
(N=6937293.04 E=2513027.73)

138+00

137+00

136+32.81 ◁=46°53'16.47" (Lt.)
Construct Special 8' Dia Pressure-Type Manhole As Per Detail Sheet 17.
(N=6937469.41 E=2512903.51)

136+00

135+06

135+23

CITY OF DALLAS
(Sanitation Landfill Property)

Ex.8" Gas Main

50' Gas Main Easement

12" Gas (ABANDONED)

83 Lin.Ft. Dry Rip-Rap Type "A" See Detail Sheet 18

HIGH BANK

Drainage Channel

Ex.15" Wastewater Main (4110-1623 Sht 15&16)

15" Wastewater Main

Ex.Dirt & Gravel Road

GAS PROBE

MONITORING WELL

Ex. Agriculture Levee

Abandon Ex.15" Wastewater Main

Abandon Exist Manhole Per DWU Std Dwg. 316 (N=6937548.68 E=2513067.88)

Abandon Exist Manhole Per DWU Std Dwg. 316 (N=6937116.14 E=2513406.17)

133+62.02 ± (34.67' ± Rt) ±
Abandon & Remove Ex. Drop Conn. M.H.
Construct 5' Reinforced Pressure -Type M.H.
Conn. Ex 15" In (NW)
Abandon Ex. 15" W.W. Out (SE)
Construct Prop. 15" Out (EAST)
Typical To DWU Std. Dwg. 304
(N=6937741.60 E=2512924.67)

133+62.02
Construct Special 8' Dia Pressure-Type Manhole As Per Detail Sheet 17.
Connect Prop. 15" In West
(N=6937736.52 E=2512958.98)

MATCH MARK 133+00

16" Sludge Force Main (4520-91 Sht.701)

72" Water Main (6850W-552 Sht 2)

Fence Line

Ex.2 - 10'x5' Box Culvert

SIMPSON STUART RD.

CITY OF DALLAS
(Sanitation Landfill Property)

Toe
Proposed Levee
Top
Prop. Levee Access Road
Top
Proposed Levee
Toe

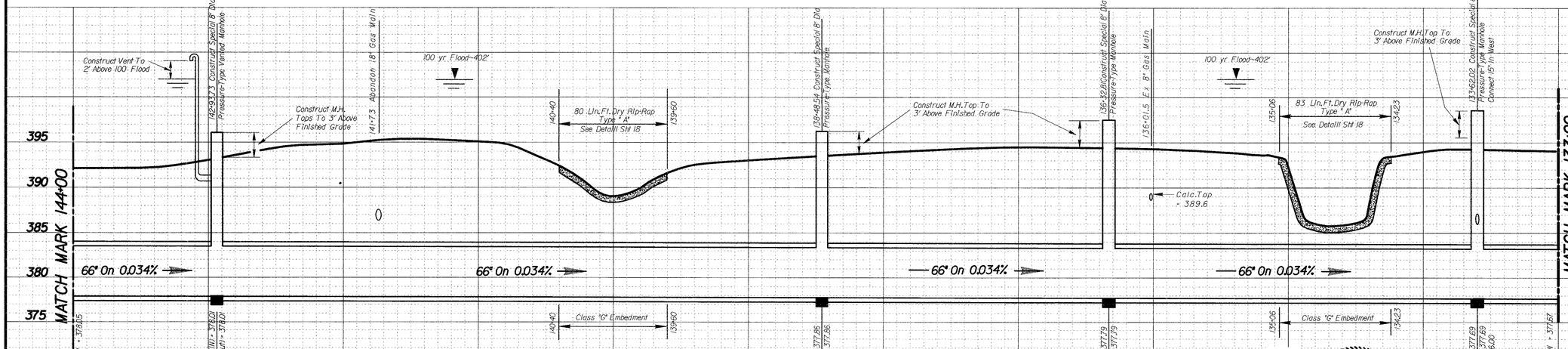

1100 L.F. 66" R.C.P. ASTM C 76, Wastewater Pipe
Pipe Class IV, Wall B, with 300° PVC Liner
ASTM C 361 Joints with Steel End Rings
Class "B" Embedment (Unless Noted Otherwise)

Alternate:
1100 L.F. 66" R.T.R.P. ASTM D 3262, (Min. Stiffness 46psi) WW Pipe
ASTM D 4161 Joints
Class "B-2" Embedment (Unless Noted Otherwise)

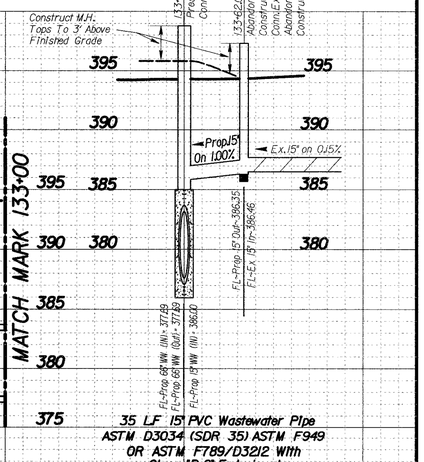

35 L.F. 15" PVC Wastewater Pipe
ASTM D3034 (SDR 35) ASTM F949
OR ASTM F789/D3212 With
Class "B-2" Embedment

Contract 03-248

STATE OF TEXAS
JOHNNY FORTAIN
85546
LICENSED PROFESSIONAL ENGINEER
12/3/03

13

66" WASTEWATER MAIN RELOCATION
BORDERING McCOMMAS LANDFILL LEVEE
EAST of US 75 TO WEST of TRINITY RIVER
DALLAS WATER UTILITIES DEPARTMENT
CITY OF DALLAS, TEXAS

DESIGN	DRAWN	DATE	SCALE	NOTES	FILE	NO.
W.Turner C.Kopecki	W.Turner C.Kopecki J.Bernard	Dec 03	1" =40' Horz 1" =6' Vert	Public Works	4110	1623C

remote/wastewater/McCommas/alignment/01623CSht13.dgn

P.I.~ 155+93.996 ◁ = 44°10'47"(Rt)
Construct Special Pressure-Type
Junction Structure.
Connect Ex.54" WW In (S.W.)
Connect Prop.66"WW Out (N.)
Abandon Ex.54" WW Out (N.E.)
As Per Detail Sht.16.
(N=6935852.99, E=2513981.23)

P.I.~ 155+63.86 ◁ = 45°59'30"(Rt)
Construct Special 8' Dia. Pressure-Type
Vented Manhole, As Per Detail Sht.17.
(N=6935882.09, E=2513989.02)

Ex.54" Wastewater Main

ORCHARD

Blk.8003
ABST.380
N.Burnett

ORCHARD

ORCHARD

CONSTRUCT 66" WASTEWATER MAIN

N

MATCH MARK 144+00

155+00 154+00 153+00 152+00 151+00 150+00 149+00 148+00 147+00 146+00 145+00

66"

66"

Abandon Exist Structure As
Per Details on Sheets 20 & 21
(N=6935870.22, E=2514010.53)

24" Cottonwood

24" Cottonwood

Ex.8" Gas Main

50' Gas Main Easement

Ex.8" Gas Main

50' Gas Main Easement

Ex.8" Gas Main

HIGH BANK

HIGH BANK

HIGH BANK

Drainage Channel

Abandon Ex.15" Wastewater

Drainage Channel

Abandon Exist Manhole
Per DWU Std Dwg. 316
(N=6936388.00, E=2513843.39)

HIGH BANK

HIGH BANK

Abandon Exist Manhole
Per DWU Std Dwg. 316
(N=6936388.00, E=2513843.39)

Ex.15" Wastewater Main

4110 -1623 Sht 14-15

Ex.15" Wastewater Main

4110 -1623 Sht 14-15

Ex.Dike 36" Wastewater Main

Abandon Exist.
2-36" W.W. Mains

Toe Levee

Proposed Levee

Top Levee

Ex.15" Wastewater Main

4110 -1623 Sht 14-15

Toe Levee

Proposed Levee

Top Levee

Ex.Dirt & Gravel Road

Toe Levee

Proposed Levee

Top Levee

N30°53'06"W

Prop.Levee Access Road

Prop.Levee Access Road

Prop.Levee Access Road

Abandon Exist Structure As
Per Details on Sheets 20 & 21
(N=6935987.36, E=2514206.88)

Ex.60"WW Main

Abandon Exist.
60" W.W. Main

Abandon Exist Manhole
Per DWU Std Dwg. 316
(N=6936034.96, E=2514175.04)

Ex.Dirt & Gravel Road

CITY OF DALLAS
(Sanitation Landfill Property)

100 yr. Flood~402'

100 yr. Flood~402'

Construct Special
Pressure-Type Junction Structure.
Connect Ex.54" WW In (S.W.)
Connect Ex.66" WW Out (N.)
Abandon Ex.54" WW Out (N.E.)
155+93.99

Construct Special 8' Dia. Pressure-Type Vented M.H.
155+63.86

Construct Vent To
2' Above 100' Flood

Construct M.H. Top To
3' Above Finished Grade

Construct M.H. Top To
3' Above Finished Grade

395
390
385
380
375
370

Ex.Groundline

66" On 0.034%

MATCH MARK 144+00

Fl.- Ex.54" WW In = 378.18

Fl.- Prop 66" WW Out = 378.46

Fl.- Prop 66" WW (In) = 378.45

Fl.- Prop 66" WW (Out) = 378.45

Fl.- Prop 66" WW = 378.05

155+00 154+00 153+00 152+00 151+00 150+00 149+00 148+00 147+00 146+00 145+00 144+00

B.M. Set Cut "X" On N.Rim Of W.W.M.H.
18' W.Of Original P.W. Preliminary Base
Line Sta. 77+13.90
ELEV. 392.74

B.M. Found Cut "X" On N.Rim Of
Siphon M.H. 42' S. & 24' W. Of
Original P.W. Preliminary Base
Line @ Sta. 77+00
ELEV. 394.73

B.M. Found Cut "X" On Top Of 12"x12"
Junction Box Over Existing W.W.
@ Existing Levee.
ELEV. 392.22

Contract 03-248

1194 L.F. 66" R.C.P. ASTM C 76, Wastewater Pipe
Pipe Class IV, Wall B, with 300° PVC Liner
ASTM C 361 Joints with Steel End Rings
Class "C" Embedment (Unless Noted Otherwise)
Alternate;
1194 L.F. 66" R.T.R.P. ASTM D 3262, (Min. Stiffness 46 psi) WW Pipe
ASTM D 4161 Joints
Class "B-2" Embedment (Unless Noted Otherwise)

STATE OF TEXAS
JOHNNY PARTAIN
85546
LICENSED PROFESSIONAL ENGINEER
12/3/03

14

remote/wastewater/McCommas/alignment/01623CSht4.dgn

66" WASTEWATER MAIN RELOCATION
BORDERING McCOMMAS LANDFILL LEVEE
EAST of US 75 TO WEST of TRINITY RIVER
DALLAS WATER UTILITIES DEPARTMENT
CITY OF DALLAS, TEXAS

DESIGN	DRAWN	DATE	SCALE	NOTES	FILE	NO.
W.Turner C.Kopecki	W.Turner C.Kopecki J.Bernard	Dec 03	1"=40' Horz 1"=6' Vert	Public Works	4110	1623C

GENERAL NOTES

1. See Sheet 18 For General Notes And General Design Details.
2. Design Criteria Using Ultimate Strength:
   1. f'c=4200 P.S.I
   2. fy=60,000 P.S.I.
   3. SAFETY FACTORS:
      A: LIVE LOADS=1.7
      B: DEAD LOADS=1.4
   4. SOIL LOADS=125#/ft^3
   5. A.C.I. Code Provision

REBAR LAP LENGTH SCHEDULE		
REBAR	NORMAL REBAR	EPOXY COATED
#3	12"	15"
#4	15"	20"
#5	19"	25"
#6	23"	30"
#7	33"	43"
#8	37"	49"
#9	42"	55"
#10	50"	66"
#11	62"	81"

2 Contractor Shall Divert Flow In Manhole Structure In Order To Pour Concrete Necessary For Inverts. No Separate Pay Item. Also Plug Abandoned Main & Finish Shaped Invert Once All Wastewater Connection Sequencing Has Been Completed.

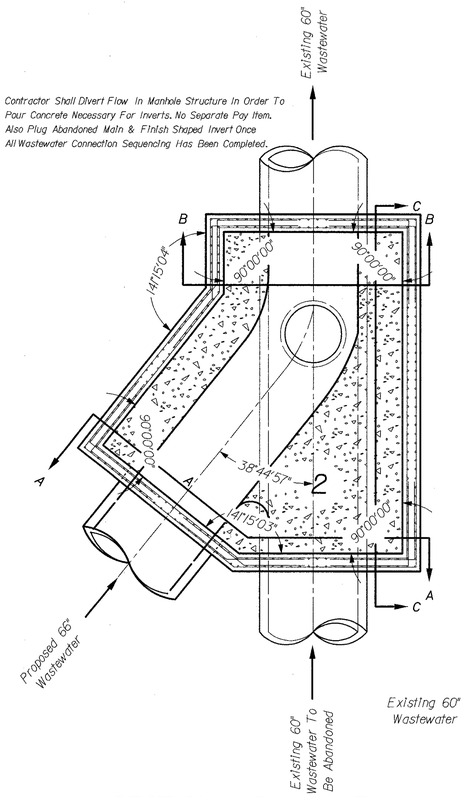

SECTIONAL PLAN VIEW

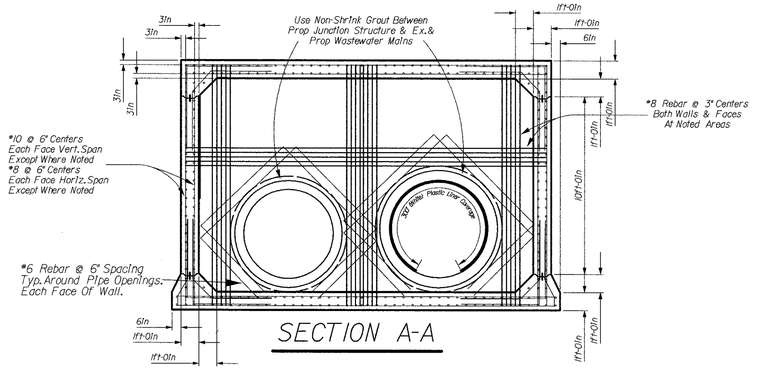

SECTION A-A

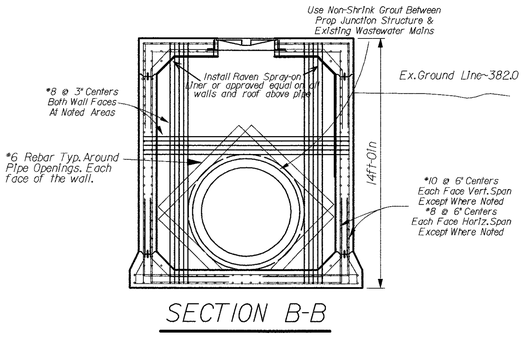

SECTION B-B

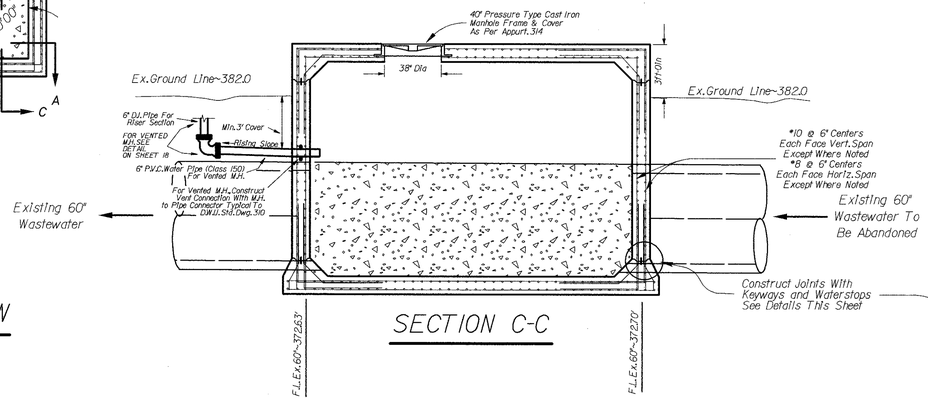

SECTION C-C

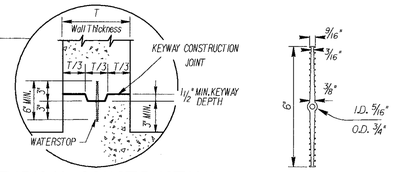

TYPICAL CONSTRUCTION JOINT
N.T.S.

WATERSTOP DETAIL
N.T.S.

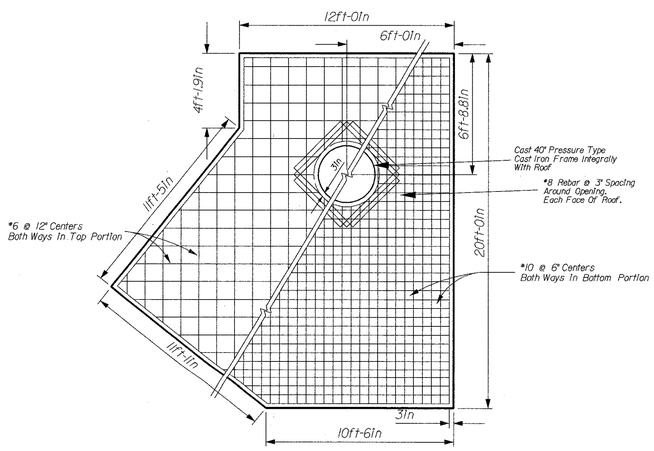

ROOF STEEL LAYOUT

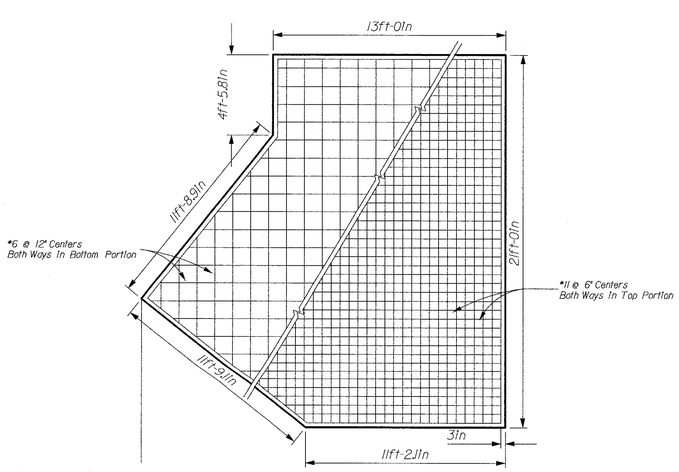

FLOOR STEEL LAYOUT

Contract 03-248

STATE OF TEXAS
JOHNNY PARTAIN
85546
LICENSED PROFESSIONAL ENGINEER
Johnny Partain 12/3/03

(15)

/usr/remote/wastewater/mccommas/alignment/QI623CSH15.dgn

66" WASTEWATER MAIN RELOCATION
BORDERING McCOMMAS LANDFILL LEVEE
EAST of US 75 TO WEST of TRINITY RIVER
DALLAS WATER UTILITIES DEPARTMENT
CITY OF DALLAS, TEXAS

DESIGN	DRAWN	DATE	SCALE	NOTES	FILE	NO.
J.Orozco J.Partain	J.Bernard J.Orozco	July 03	1"=40' Horz 1"=6' Vert	Public Works	4110	1623C

2 Contractor Shall Divert Flow In Manhole Structure In Order To Pour Concrete Necessary For Inverts. No Seperate Pay Item. Also Plug Abandoned Main & Finish Shaped Invert Once All Wastewater Connection Sequencing Has Been Completed.

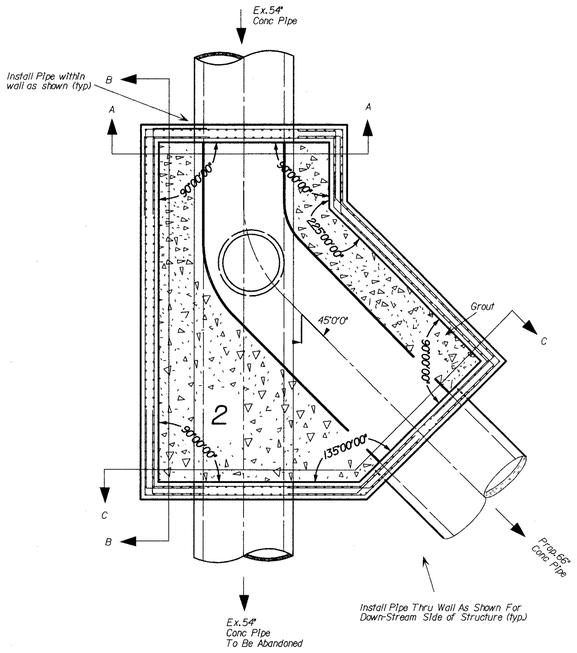

SECTIONAL PLAN VIEW

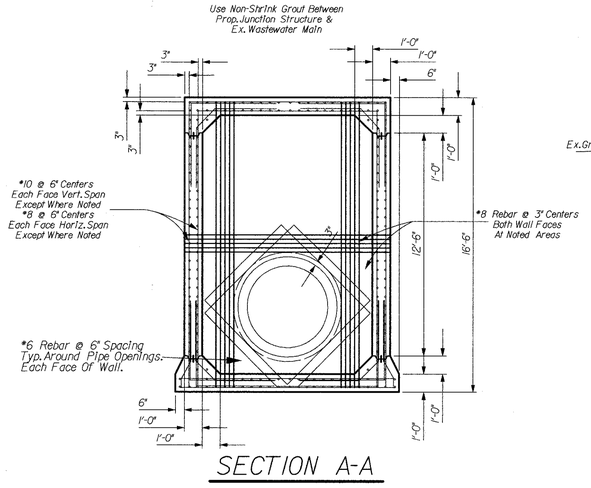

SECTION A-A

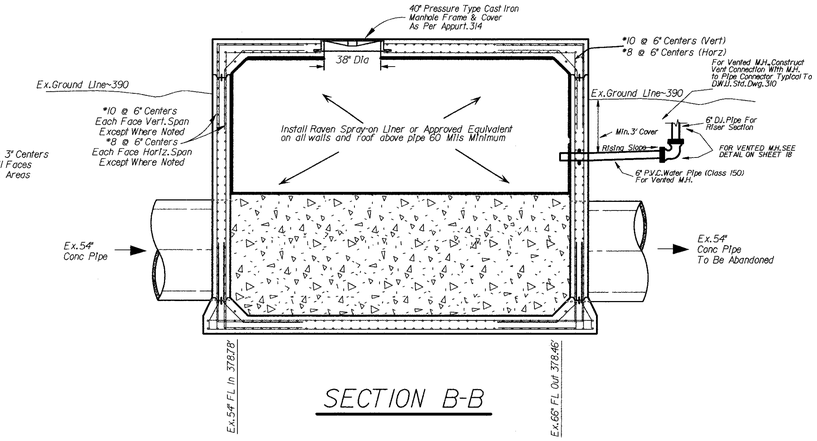

SECTION B-B

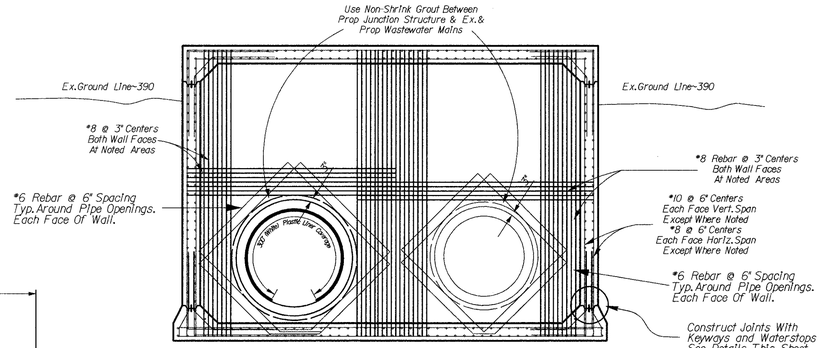

SECTION C-C

GENERAL NOTES

1. See Sheet 18 For General Notes And General Design Details.
2. Design Criteria Using Ultimate Strength:
   1. f'c'=4200 P.S.I.
   2. fy=60,000 P.S.I.
   3. SAFETY FACTORS:
      A: LIVE LOADS=1.7
      B: DEAD LOADS=1.4
4. SOIL LOADS=125#/ft^3
5. A.C.I. Code Provision

REBAR LAP LENGTH SCHEDULE		
REBAR	NORMAL REBAR	EPOXY COATED
#3	12"	15"
#4	15"	20"
#5	19"	25"
#6	23"	30"
#7	33"	43"
#8	37"	49"
#9	42"	55"
#10	50"	66"
#11	62"	81"

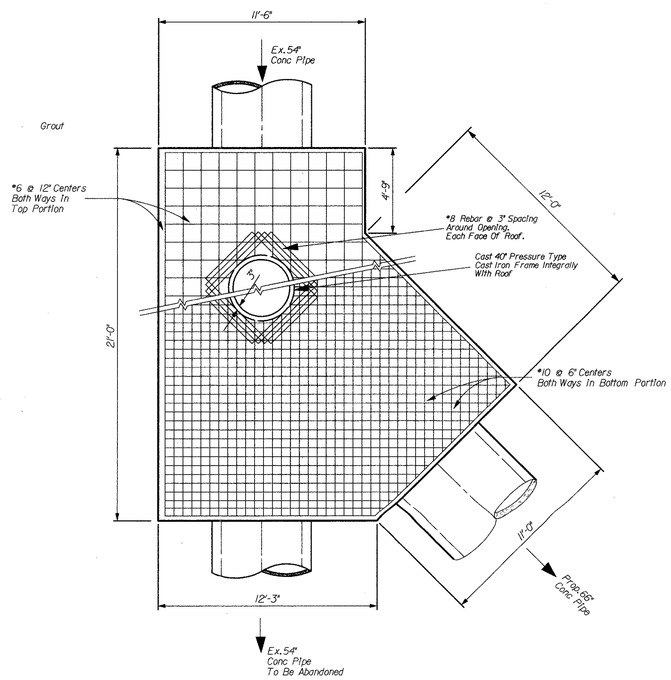

ROOF STEEL OUT

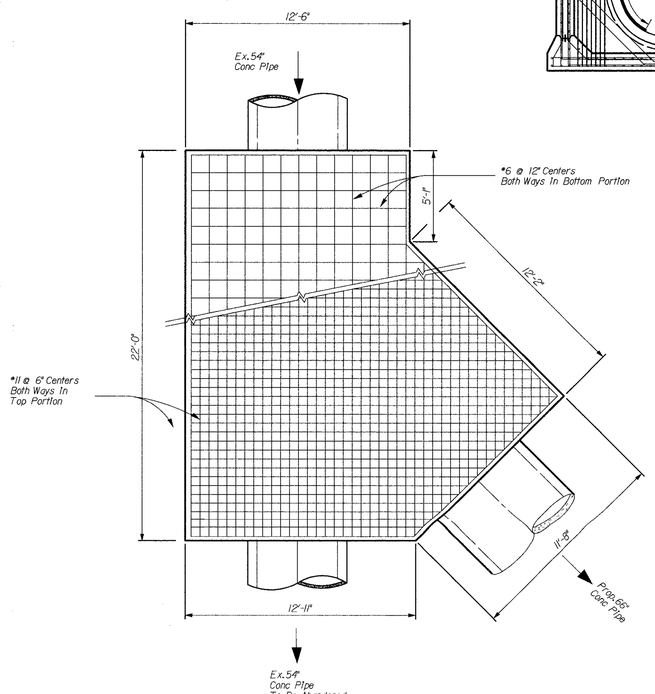

MAT STEEL LAYOUT

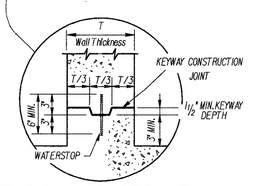

TYPICAL CONSTRUCTION JOINT
N.T.S.

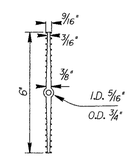

WATERSTOP DETAIL
N.T.S.

Contract 03-248

STATE OF TEXAS
JOHNNY PARTAIN
85546
LICENSED PROFESSIONAL ENGINEER
12/3/03

16

/usr/remote/McCommas/alignment/01623CSht6.dgn

66" WASTEWATER MAIN RELOCATION						
BORDERING McCOMMAS LANDFILL LEVEE						
EAST of US 75 TO WEST of TRINITY RIVER						
DALLAS WATER UTILITIES DEPARTMENT						
CITY OF DALLAS, TEXAS						
DESIGN	DRAWN	DATE	SCALE	NOTES	FILE	NO.
C. Sanchez	J.Orozco C. Sanchez	Nov 03	1" = 4'	Public Works	4110	1623C

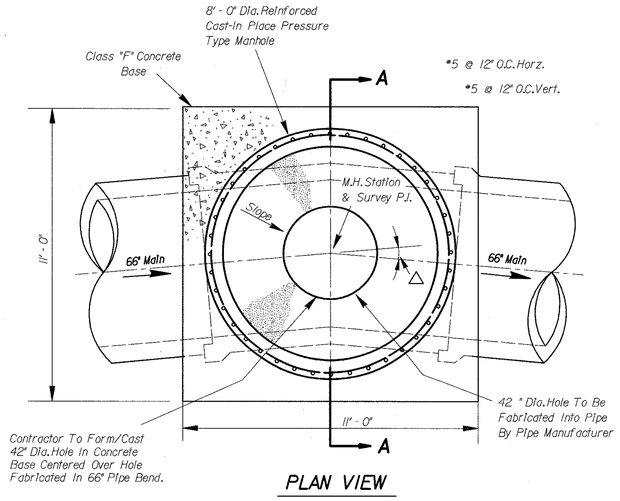

PLAN VIEW

SCHEDULE FOR DEF. Δ < 25°

SHEET NUMBER	STATION	DEF. ANGLE	VENTED	ft. OF MAIN	± FINISHED GROUND EL.	± TOP M.H. 3' FILL	± TOP M.H. 5' FILL
3	16+05.07	18° 41' 21"	YES	373.70	383.0 ±	386.0 ±	388.0 ±
4	29+11.26	18° 40' 04"	NO	374.14	383.0 ±	386.0 ±	388.0 ±
5	41+41.71	4° 29' 21"	YES	374.56	385.0 ±	388.0 ±	390.0 ±
5	47+62.55	13°54'32"	NO	374.77	387.0 ±	390.0 ±	392.0 ±
6	59+60.74	7° 23' 43"	NO	375.18	386.5 ±	389.5 ±	391.5 ±
7	64+60.72	13° 46' 40"	YES	375.35	385.4 ±	388.4 ±	390.4 ±
8	80+27.85	7° 22' 06"	YES	375.88	384.8 ±	387.8 ±	389.8 ±
9	84+11.08	11° 51' 23"	NO	376.01	385.0 ±	388.0 ±	390.0 ±
9	89+11.04	11° 24' 26"	NO	376.18	385.2 ±	388.2 ±	390.2 ±
9	92+92.29	12° 02' 07"	YES	376.31	394.5 ±	397.5 ±	399.5 ±
11	112+00.14	0° 01' 35"	YES	376.96	397.0 ±	400.0 ±	402.0 ±
13	138+48.54	8°29'28"	NO	377.86	393.5 ±	396.5 ±	398.5 ±
13	142+93.73	12° 39' 23"	YES	378.01	393.2 ±	396.2 ±	398.2 ±

ACCESS MANHOLE - (DEF. Δ < 25°)

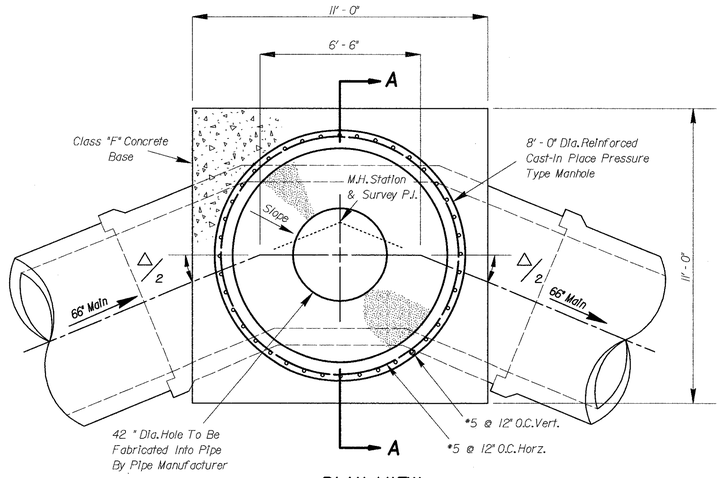

PLAN VIEW

SCHEDULE FOR DEF. Δ > 25°

SHEET NUMBER	STATION	DEF. ANGLE	VENTED	ft. OF MAIN	± FINISHED GROUND EL.	± TOP M.H. 3' FILL	± TOP M.H. 5' FILL
2	1+33.85	45° 07' 42"	NO	373.20	382.3	385.3	387.3
3	22+58.16	37° 21' 08"	NO	373.92	384.5	287.5	289.5
6	55+08.67	25° 17' 42"	YES	375.03	386.5 ±	389.5 ±	391.5 ±
12	131+00	47° 50' 07"	YES	377.61	394.5	397.5	399.5
13	136+32.81	47° 53' 16"	NO	377.79	394.3	397.4	398.5
14	155+63.86	45° 59' 30"	NO	378.45	390.0	393.0	395.0

ACCESS MANHOLE - (DEF. Δ > 25°)

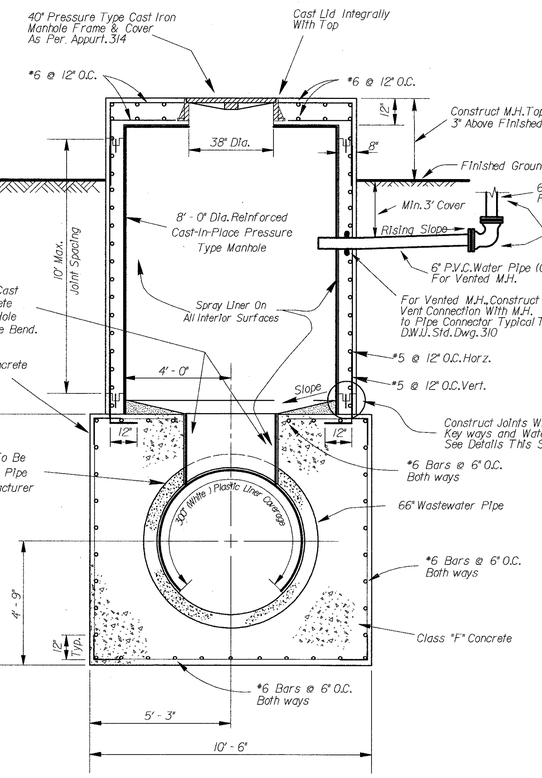

SECTION "A-A"

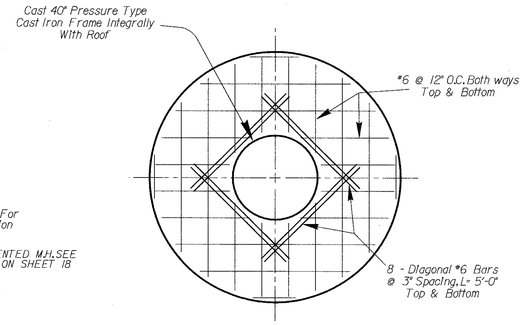

ROOF STEEL

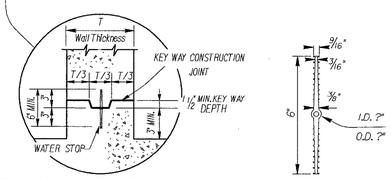

TYPICAL CONSTRUCTION JOINT
N.T.S.

WATER STOP DETAIL
N.T.S.

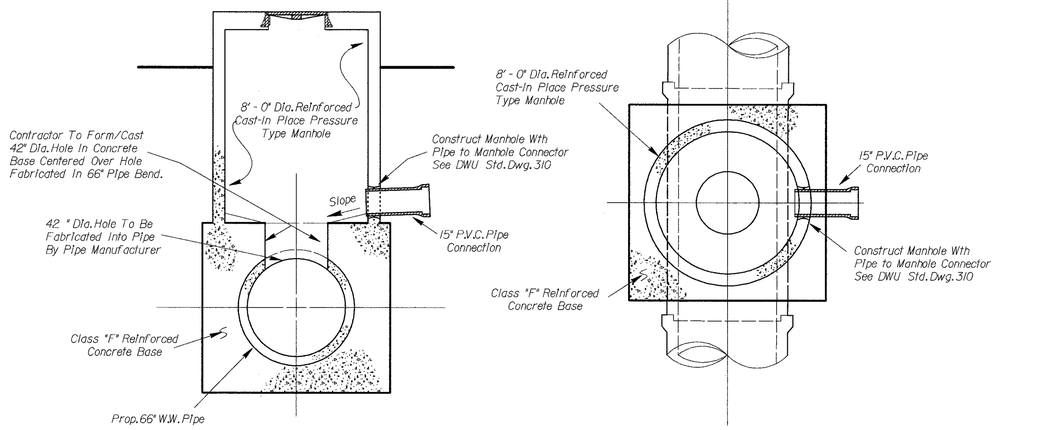

SPECIAL 15" P.V.C. STUB OUT FOR MANHOLE @ STA. 133+62.02

Contract 03-248

STATE OF TEXAS
JOHNNY PARTAIN
85546
LICENSED PROFESSIONAL ENGINEER
12/3/03

17

/usr/remote/McCommas/alignment/Q1623CSh17.dgn

66" WASTEWATER MAIN RELOCATION
BORDERING McCOMMAS LANDFILL LEVEE
EAST of US 75 TO WEST of TRINITY RIVER
DALLAS WATER UTILITIES DEPARTMENT
CITY OF DALLAS, TEXAS

DESIGN	DRAWN	DATE	SCALE	NOTES	FILE	NO.
C.Kopecki W.Turner	C. Kopecki W. Turner	July 03	1" = 40' Horz 1" = 6' Vert	Public Works	4110	1623C

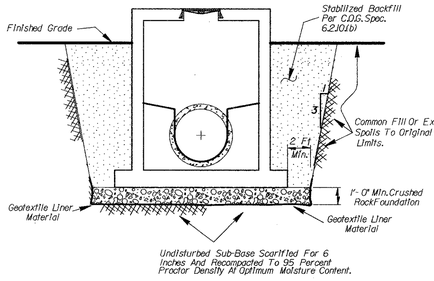

EXCAVATION AND BACKFILL @ STRUCTURES & MANHOLES

N.T.S.

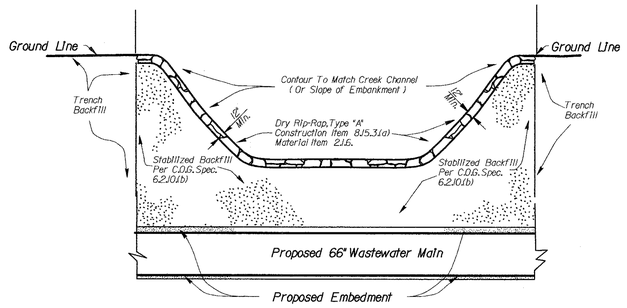

DRY RIP-RAP TYPE "A" & STABILIZED BACKFILL DETAIL

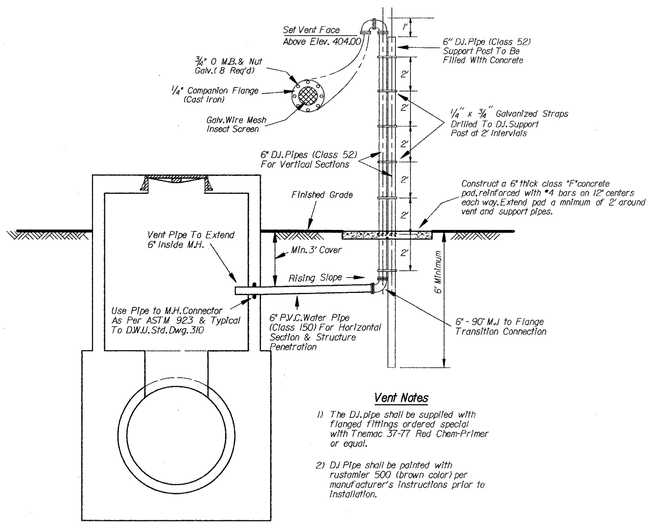

Vent Notes

1) The D.I. pipe shall be supplied with flanged fittings ordered special with Tnemec 37-77 Red Chem-Primer or equal.

2) D.I. Pipe shall be painted with rustomier 500 (brown color) per manufacturer's instructions prior to installation.

6" AIR VENT DETAIL (FOR STRUCTURES & MANHOLES)

N.T.S.

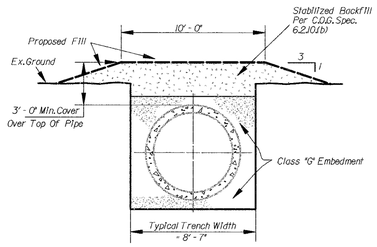

SPECIAL MINIMUM COVER/FILL DETAIL

GENERAL STRUCTURAL NOTES

1. THE CONTRACTOR SHALL VERIFY THE LOCATION OF ALL EXISTING UTILITIES BEFORE STARTING CONSTRUCTION.

2. THE CONTRACTOR SHALL MAINTAIN EXISTING WASTEWATER FLOWS AND EXISTING WASTEWATER SERVICES AT ALL TIMES. PHASED CONSTRUCTION AND TESTING OF PROPOSED 66" MAIN MAY BE REQUIRED FROM ST.A.0+16.95 TO ST.A.1.33+96.80 TO PROVIDE A OUTFALL FOR EXISTING 15" WASTEWATER MAIN AT ST.A.1.33+96.80.

3. THE CONTRACTOR SHALL COORDINATE ALL TIE-INS WITH THE INSPECTOR.

4. THE MAJORITY OF THE PIPELINE IS TO BE CONSTRUCTED IN AREAS WHICH FLOOD REQUENLTY, RESULTING IN SATUARATED SOIL CONDITIONS. THE CONTACTOR SHALL TAKE NECESSARY PRECAUTIONS TO PREVENT FLOTATION OF THE PIPE DURING CONSTRUCTION. IF ANY SECTION OF PIPE FLOATS PRIOR TO FINAL ACCEPTANCE BY DALLAS WATER UTILITIE, THE CONTRACTOR SHALL EXCAVATE AND RE-INSTALL THAT SECTION.

5. THE CONTRACTOR SHALL RESTORE ALL GRADES AND LANDSCAPING TO PRECONSTRUTION CONDITIONS AND RE-ESTABLISH VEGETATION AREAS DAMAGED BY THE CONSTRUCTION ACTIVITIES WITH THE SAME TYPE OF GROWTH OR AS DIRECTED BY THE CONSTRCTION ACTIVITIES WITH THE SAME TYPE OF GROWTH OR AS DIRECTED BY THE OWNER. PAYMENT WILL BE BASED ON TRENCH WIDTH.

6. WATERSTOPS: PROVIDE A CONTINUOUS STRIP OF WATERSTOP IN ALL HORIZONTAL AND VERTICAL JOINTS UNLESS SPECIFICALLY SHOWN OTHERWISE ON DRAWINGS. WATERSTOPS SHALL BE BONDED TOGETHER FOR WATERTIGHT JOINT. ANY WATERSTOP INTERSECTED BY A PIPE OR OTHER PENETRATION SHALL BE CUT AWAY SO AS TO PROVIDE A SNUG FIT JOINT BETWEEN THE WATERSTOP AND THE PENETRATION AND A SUITABLE JOINT SEALER SHALL ALSO BE USED TO SEAL THE JOINTS.

7. THE LOCATION OF ANY CONSTRUCTION JOINTS PROPOSED BY THE CONTRACTOR SHALL BE SUBMITTED TO THE ENGINEER 72 HOURS (3 BUSINESS DAYS) FOR REVIEW PRIOR TO THE PLACEMENT OF FORMS. ALL PROPOSED JOINTS SHALL BE SHOWN ON THE REINFORCING STEEL SHOP DRAWINGS. ALL JOINTS SHALL HAVE A KEYWAY AND CONTINUOUS REINFORCEMENT. MAXIMUM SPACING FOR CONSTRUCTION JOINTS IN WALL SECTIONS SHALL NOT EXCEED 10' IN HEIGHT (EXCEPT AS NOTED ON PLANS).

8. ALL PROPOSED PIPES SHALL HAVE CLASS "A" EMBEDMENT FROM THE M.H. TO THE NEAREST JOINT OF PIPE --5' MINIMUM.

9. ALL MANHOLE INVERTS DETAILS SHALL CONFORM TO DWU STD. DWG.# 302.

10. ALL NEW STRUCTURE AND MANHOLE INTERIORS ARE TO BE LINED WITH RAVEN SPRAY-ON-LINER (60 MIL. MIN.) COATING (OR APPROVED EQUAL) IN ACCORDANCE WITH THE TECHNICAL SPECIFICATIONS.

11. THE BELOW GRADE EXTERIOR OF THE STRUCTURES AND THE MANHOLES SHALL BE COATED WITH A WATERPROOFING MEMBRANE, 60 WET MILS. MINIMUM (TREMCO TREM PROOF 60 OR APPROVED EQUAL) AND ALLOWED 36 HOURS TO DRY PRIOR TO BACKFILLING.

12. ANY EXPOSED CORNERS SHALL BE CHAMFERED 3/4" UNLESS OTHERWISE NOTED.

13. CONTRACTOR SHALL REPAIR ALL DAMAGED CONCRETE SURFACES AS REQUIRED BY THE CONSTRUCTION INSPECTOR.

14. USE EPOXY BONDER SYSTEMS DESIGNED TO BOND: PRECAST CONCRETE. COLD JOINTS, P.V.C. AND WET CONCRETE TO EACH OTHER.

15. ALL STEEL UNLESS OTHERWISE SPECIFIED SHALL BE EPOXY COATED DEFORMED BILLET - STEEL CONFORMING TO A.S.T.M. 615, GRADE 60.

16. CONCRETE COVERAGE FOR REINFORCEMENT :
WHEN CAST AGAINST AND PERMANENTLY EXPOSED TO EARTH - 3" MIN. ;
WHEN FORMED OR TOP SURFACES EXPOSED TO WEATHER, SUBMERGED OR IN CONTACT WITH EARTH - #6 OR LARGER BARS - 3" MIN. ; &
#5 OR SMALLER BARS - 2 1/2" MIN.

17. ALL REQUIRED REBAR MINIMUM LAP LENGTHS ARE TO BE MAINTAINED (SEE LAP LENGTH SCHEDULE). NEAR PIPE OPENINGS, CONSTRUCTION JOINTS, & WALL JOINTS. WHERE LAP LENGTHS CAN NOT BE ACHIEVED, A STANDARD BAR HOOK MAY BE USED IN ACCORDANCE TO ACI CODE 12.5.

REBAR LAP LENGTH SCHEDULE

REBAR	NORMAL REBAR	EPOXY COATED
#3	12"	15"
#4	15"	20"
#5	19"	25"
#6	23"	30"
#7	33"	43"
#8	37"	49"
#9	42"	55"
#10	50"	66"
#11	62"	81"

Contract 03-248

STATE OF TEXAS
JOHNNY PARTAIN
85546
LICENSED PROFESSIONAL ENGINEER

Johnny Partain 12/3/03

18

66" WASTEWATER MAIN RELOCATION
BORDERING McCOMMAS LANDFILL LEVEE
EAST of US 75 TO WEST of TRINITY RIVER
DALLAS WATER UTILITIES DEPARTMENT
CITY OF DALLAS, TEXAS

DESIGN	DRAWN	DATE	SCALE	NOTES	FILE	NO.
		July 03	N.T.S.		4110	1623C

/usr/remote/mccommas/alignment/01623CSh 18.dgn

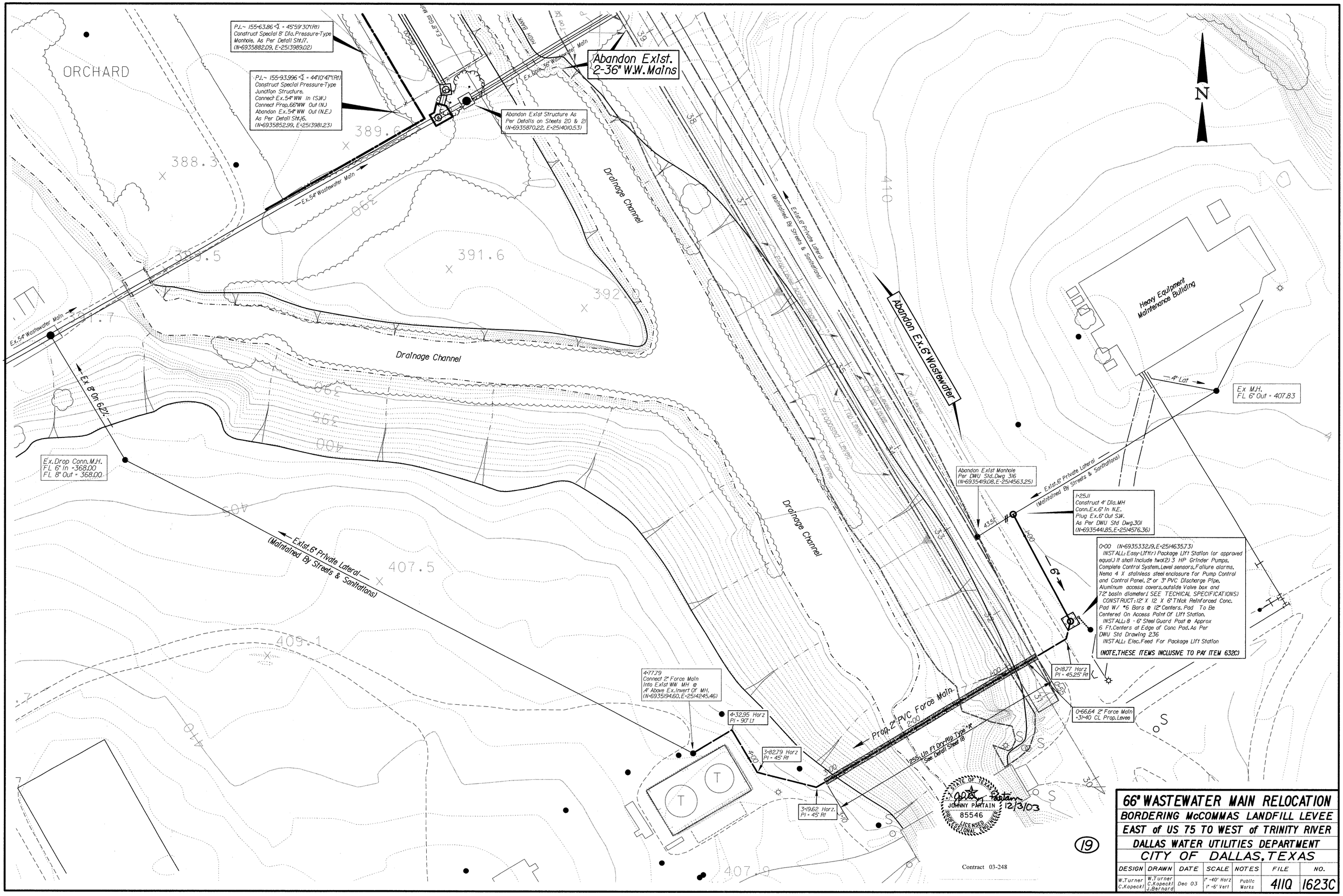

66" WASTEWATER MAIN RELOCATION

BORDERING McCOMMAS LANDFILL LEVEE

EAST of US 75 TO WEST of TRINITY RIVER

DALLAS WATER UTILITIES DEPARTMENT

CITY OF DALLAS, TEXAS

DESIGN	DRAWN	DATE	SCALE	NOTES	FILE	NO.
W.Turner C.Kopecki	W.Turner C.Kopecki J.Bernard	Dec 03	1" =40' Horz 1" =6' Vert	Public Works	411Q	1623C

19

Contract 03-248

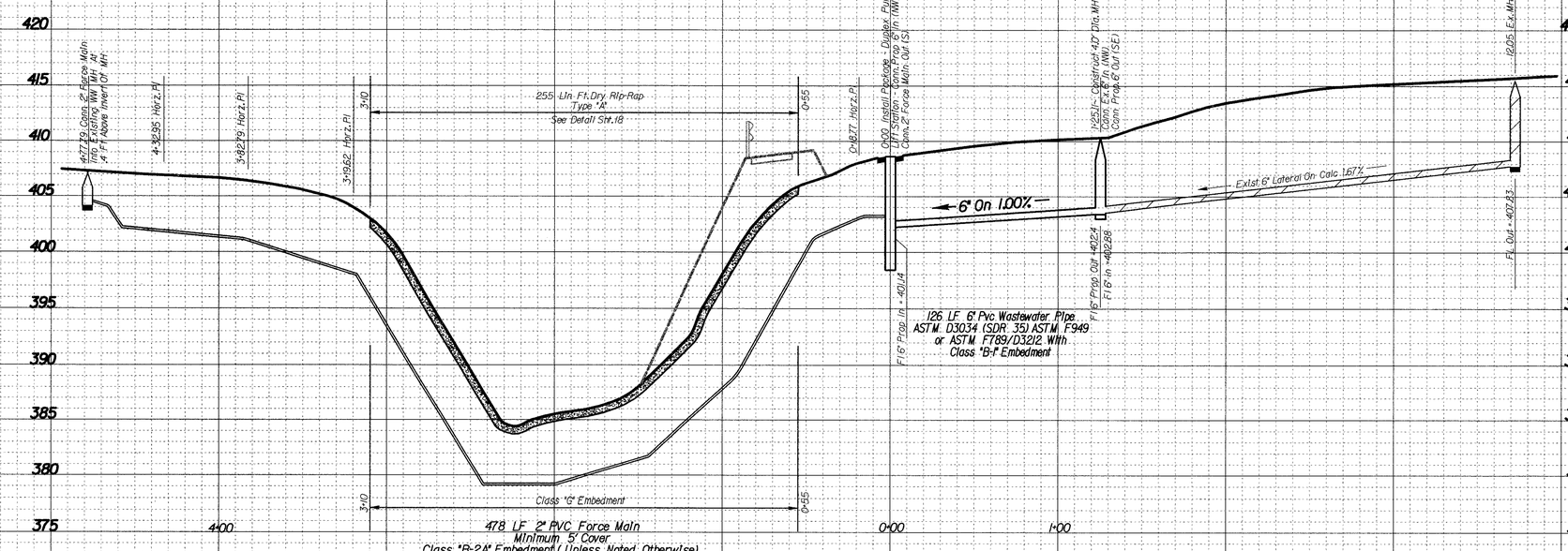

Contract 03-248

STATE OF TEXAS
JOHNNY PARTAIN
85546
LICENSED PROFESSIONAL ENGINEER

Johnny Partain 12/3/03

(19A)

66" WASTEWATER MAIN RELOCATION

BORDERING McCOMMAS LANDFILL LEVEE

EAST of US 75 TO WEST of TRINITY RIVER

DALLAS WATER UTILITIES DEPARTMENT

CITY OF DALLAS, TEXAS

DESIGN	DRAWN	DATE	SCALE	NOTES	FILE	NO.
W.Turner	W.Turner J.Bernard	Apr 03	1" =40' Horz 1" =6' Vert	Public Works	4110	1623C

MANHOLE *	NORTHING	EASTING	ORIGINAL DESIGN 4110-1623	SEE ABANDONMENT DETAIL
1	6938654	2523511	Sht. 2A&2B	E
2	6938457	2522289	Sht. 3A	A
3	6938285	2521212	Sht. 3A	A
4	6938094	2520027	Sht. 3A	A
5	6937938	2519050	Sht. 3A	A
6	6937770	2518003	Sht. 3A	A
7	6937589	2516885	Sht. 8A	B
8	6937055	2515993	Sht. 9A	C
9	6936519	2515096	Sht. 9A	C
10	6935987	2514208	Sht. 11B	D
11	6935870	2514010	Sht. 11B	D
GAS VENT *				
12	6937584	2516877	Sht. 12B	F
13	6936432	2514950	Sht. 12B	F

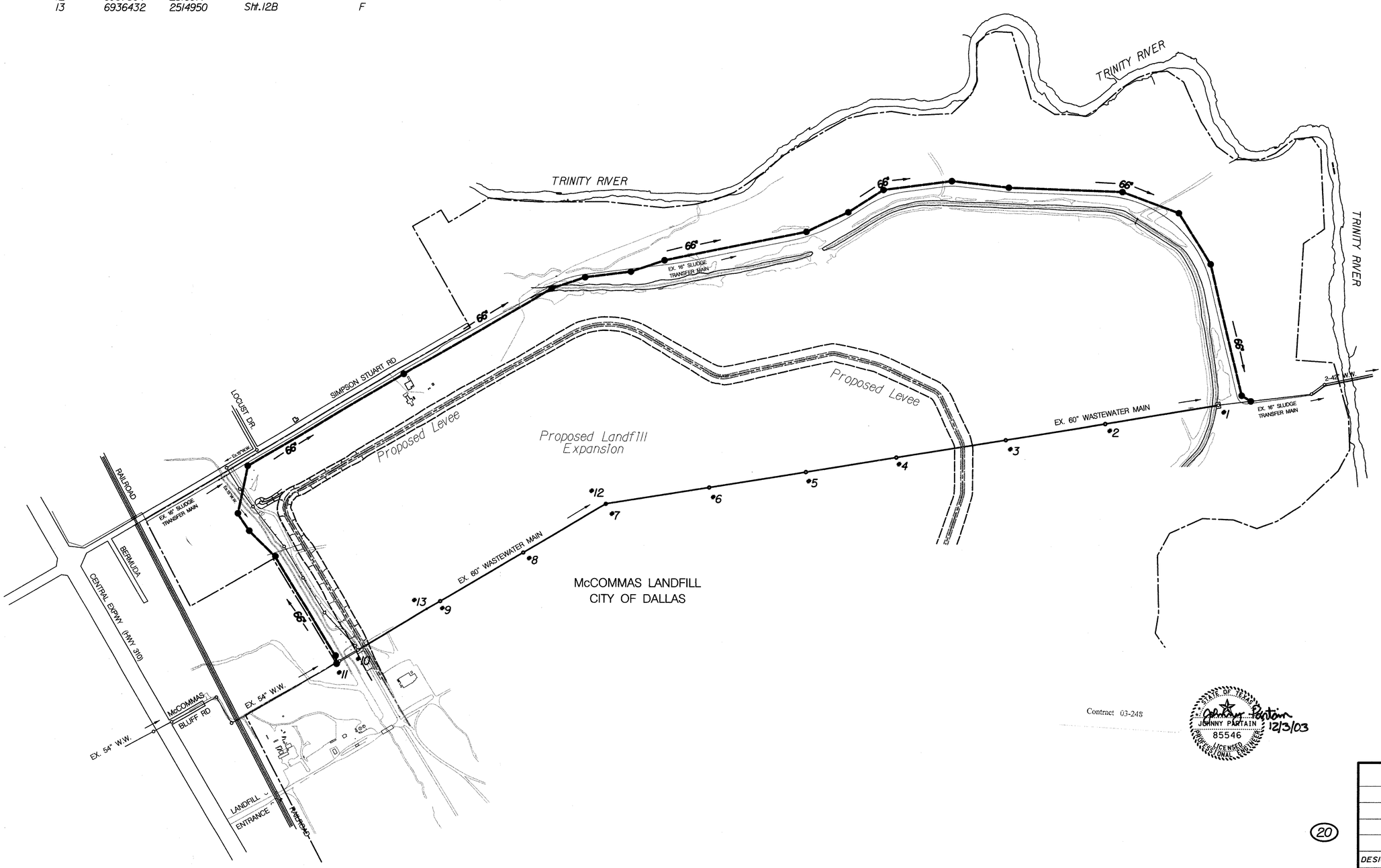

Contract 03-248

STATE OF TEXAS
JIMMY PARTAIN
85546
LICENSED PROFESSIONAL ENGINEER
12/3/03

20

EXISTING 60" WASTEWATER ABANDONMENT McCommas Landfill WATER UTILITIES DEPARTMENT CITY OF DALLAS, TEXAS						
DESIGN	DRAWN	DATE	SCALE	NOTES	FILE	NO.
A.Stelling	A.Stelling	July 2003	NTS		4110	1632C

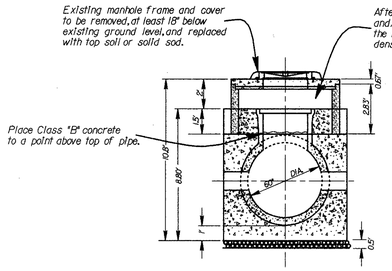

Section "A-A"

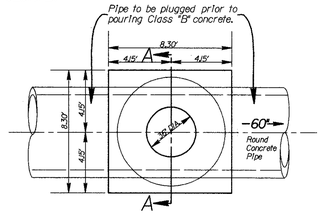

PLAN VIEW

ABANDONMENT DETAIL "A"

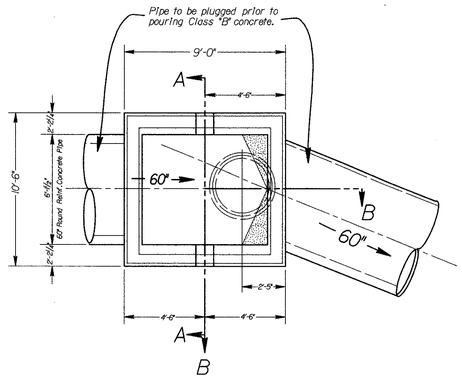

SECTIONAL PLAN VIEW

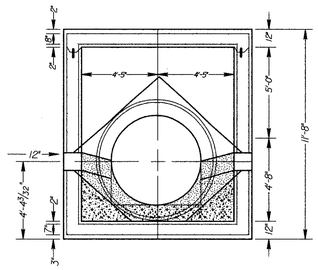

Section "A-A"

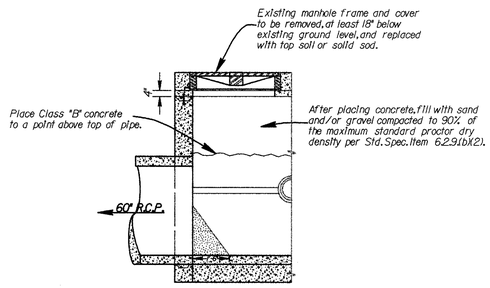

Section "B-B"

ABANDONMENT DETAIL "B"

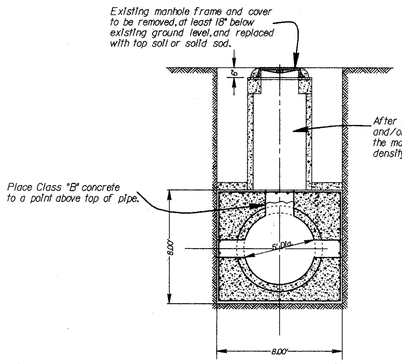

Section "A-A"

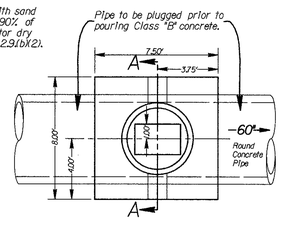

SECTIONAL PLAN VIEW

ABANDONMENT DETAIL "C"

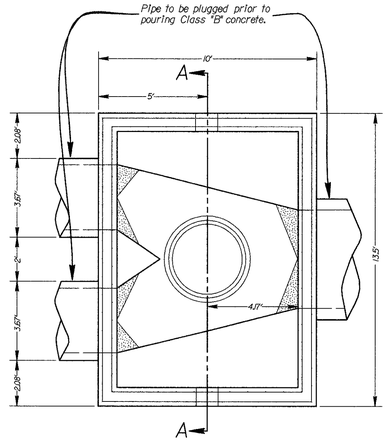

SECTIONAL PLAN VIEW

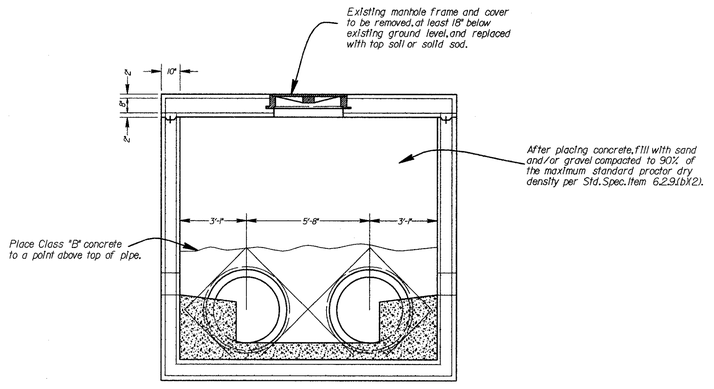

Section "A-A"

ABANDONMENT DETAIL "D"

Contract 03-248

STATE OF TEXAS
JOHNNY PARTAIN
85546
LICENSED PROFESSIONAL ENGINEER
12/3/03

EXISTING 60" WASTEWATER						
ABANDONMENT DETAILS						
McCommas Landfill						
WATER UTILITIES DEPARTMENT						
CITY OF DALLAS, TEXAS						
DESIGN	DRAWN	DATE	SCALE	NOTES	FILE	NO.
A. Stelling	A. Stelling	July 2003	NTS		411Q	1623C

e:\roadrw\waterdrw\McCommas-Mgrsee\1623CSHEET.dgn

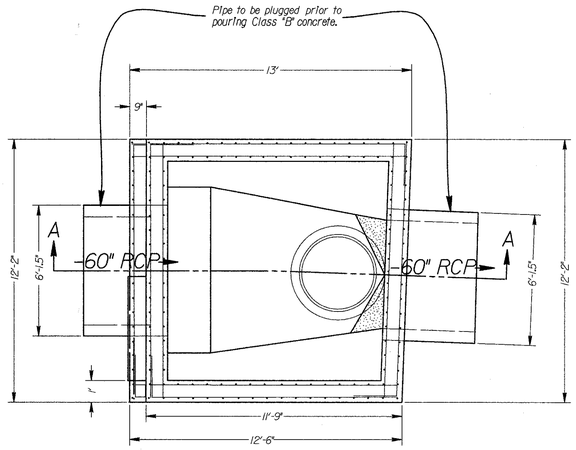

PLAN VIEW

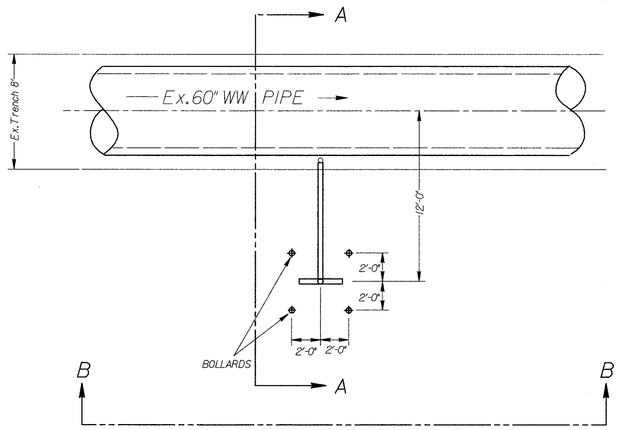

PLAN VIEW

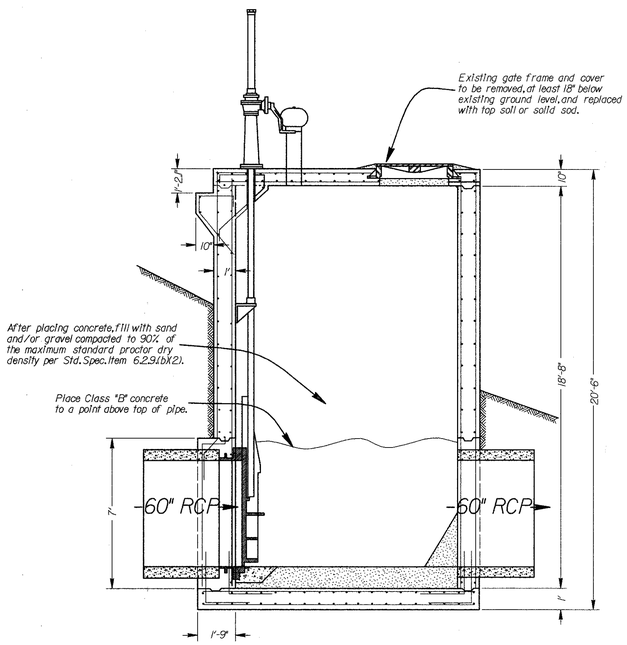

Section "A-A"

ABANDONMENT DETAIL "E"

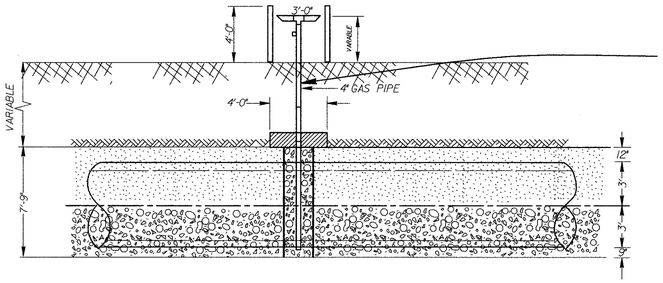

Section "B-B"

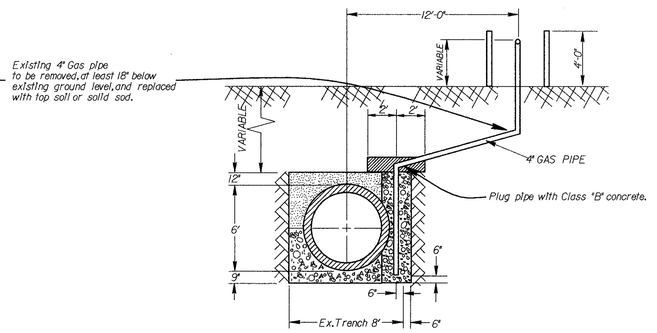

Section "A-A"

ABANDONMENT DETAIL "F"

Contract 03-248

STATE OF TEXAS
JOHNNY PARTAIN
85546
LICENSED PROFESSIONAL ENGINEER

Johnny Partain 12/3/03

(22)

EXISTING 60" WASTEWATER						
ABANDONMENT DETAILS						
McCommas Landfill						
WATER UTILITIES DEPARTMENT						
CITY OF DALLAS, TEXAS						
DESIGN	DRAWN	DATE	SCALE	NOTES	FILE	NO.
A. Stelling	A. Stelling	July 2003	NTS		411Q	1623C

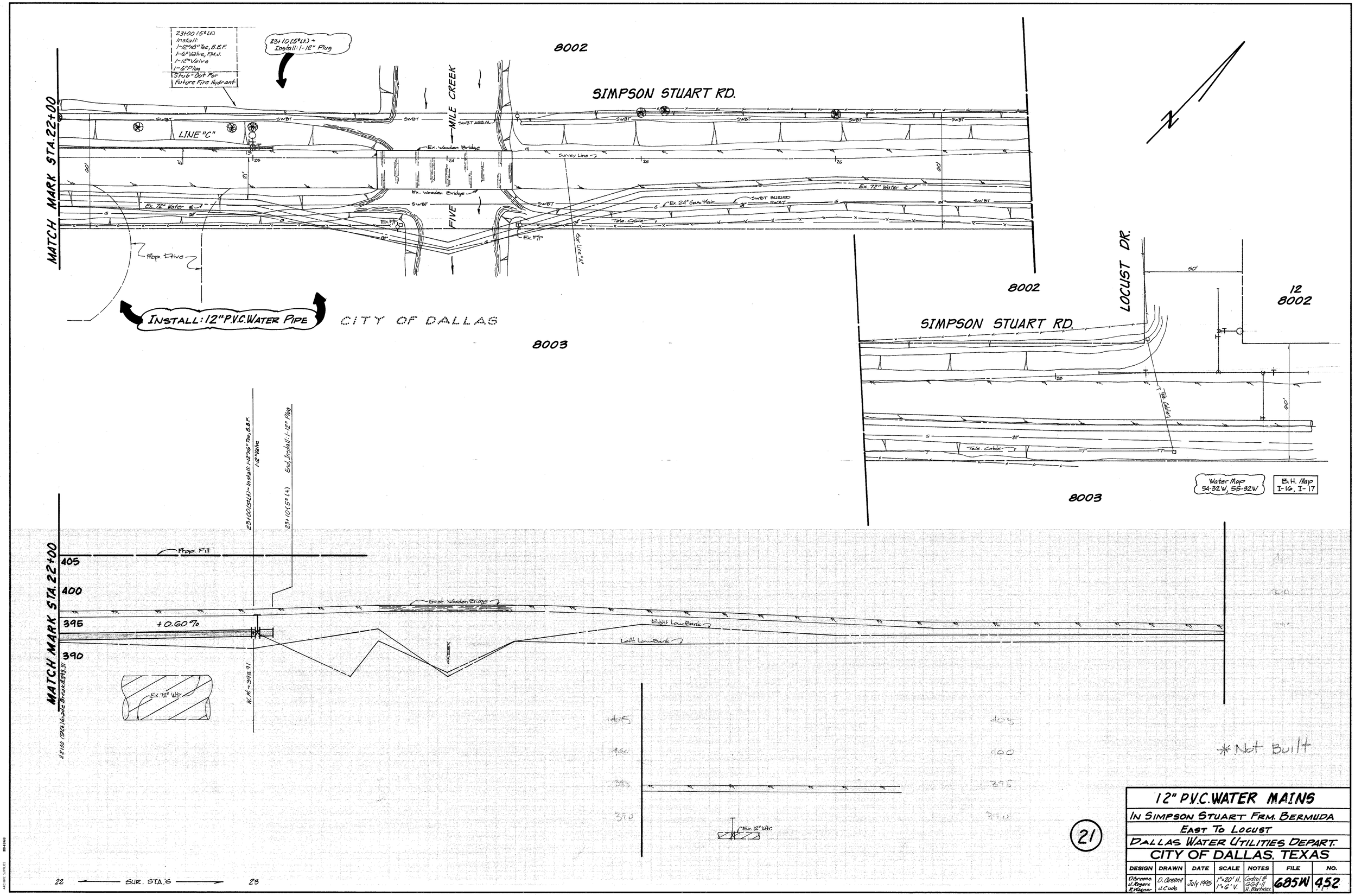

23+00 (5° Lt.) Install: 1-12"x8" Tee, B.B.F. 1-6" Valve, F.M.J. 1-12" Valve 1-6" Plug Stub-Out For Future Fire Hydrant
23+10 (5° Lt.) ~ Install: 1-12" Plug
8002
SIMPSON STUART RD.
MILE CREEK
FIVE
MATCH MARK STA. 22+00
LINE "C"
SWBT
SWBT AERIAL
Ex. Wooden Bridge
Survey Line
Ex. 72" Water
Ex. 24" Gas Main
SWBT BURIED
Tele. Cable
Ex. P/P
Sur. Line "A"
Prop. Drive
INSTALL: 12" P.V.C. WATER PIPE
CITY OF DALLAS
8003
LOCUST DR.
12
8002
SIMPSON STUART RD.
Tele. Cable
Water Map 54-32W, 55-32W
B.H. Map I-16, I-17
8003
23+00 (5° Lt.) ~ Install: 1-12"x6" Tee, B.B.F. 1-12" Valve
23+10 (5° Lt.) End, Install: 1-12" Plug
Prop. Fill
405
400
395
390
+0.60%
Exist. Wooden Bridge
Right Low Bank
Left Low Bank
CREEK
Ex. 72" Wtr.
W. Ht. ~ 393.91
22+00 (5° Lt.) Grade Break 12393.31
Ex. 12" Wtr.
*Not Built
22 SUR. STA. 6 23
21
12" P.V.C. WATER MAINS
IN SIMPSON STUART FRM. BERMUDA
EAST TO LOCUST
DALLAS WATER UTILITIES DEPART.
CITY OF DALLAS, TEXAS
DESIGN D. Greene J. Rogers R. Wagner
DRAWN D. Greene J. Cude
DATE July 1995
SCALE 1"=20' H. 1"=6' V.
NOTES Control # 664-11 H. Martinez
FILE 685W
NO. 452

LINE "W-1"
INSTALL 12" WATER

STA. 0+04 ~ LINE "W-1"
• PAV. STA. 15+13 (12'LT.)
INSTALL:
1 ~ 12" VALVE

STA. 0+26.3 ~ LINE "W-1"
• PAV. STA. 15+29.1 (26'LT.)
INSTALL:
1 ~ 12" 45° HORIZ. BEND

STA. 0+00 ~ LINE "W-1"
• PAV. STA. 15+09 (12'LT.)
REMOVE EX. PLUG & CONNECT TO EX. 12" X 12" TEE

STA. 0+06 ~ LINE "W-1"
• PAV. STA. 15+15 (12'LT.)
INSTALL:
1 ~ 12" 45° HORIZ. BEND

STA. 2+61 ~ LINE "W-1"
• PAV. STA. 17+63.8 (26'LT.)
INSTALL:
1 ~ 12" X 6" TEE (BBF)
1 ~ 12" VALVE
1 ~ 6" VALVE (FMJ)
4 L.F. 6" PVC CL.200 WATER PIPE
1 ~ FIRE HYDRANT

STA. 3+08 ~ LINE "W-1"
• PAV. STA. 18+10.8 (26'LT.)
BEGIN 18" STEEL CASING PIPE
SEAL END OF CASING PIPE

STA. 3+88 ~ LINE "W-1"
• PAV. STA. 18+90.8 (26'LT.)
END 18" STEEL CASING PIPE
SEAL END OF CASING PIPE

BLOCK 8001
9000 S. CENTRAL EXPWY.
SOUTH CENTRAL LAND L.P.
VOL. 98252, PG. 9214
D.R.D.C.T.

BLOCK 8002
CITY OF DALLAS

BLOCK 8003
CITY OF DALLAS

TREE REMOVAL BY OTHERS
SEE STREET PAVING PLANS

100' R.O.W.

70 L.F. BY OTHER THAN OPEN CUT (RAILROAD CROSSING)

STA. 3+13

STA. 3+83

RRTSPCROSSING GATE

PROP. 4' WALK (TYP.)

PROP. CURB (TYP.)

LINE "W-1"

PROP. 12" WATER

EX. 12" PVC WATER (685W-452, SH. 17)

8" C.I. WATER (ABANDONED)

PROP. 36" RCP

PROP. 39" RCP

EX. 72" R.C. WATER (685W-552, SH. 1)

EX. WATER M.H.

24" GAS

Underground 12" FOOT Fiber Optic

Underground gas marker

EX. 72" R.C. WATER (W552, SH. 1)

PROP. 2" RGS

PROP. 4" PVC

LINE "W-2"
8" WATER

C.O.

SIGN

GUY WIRE

PP

CTVR

METER

RRmisc PaintSignal BOX

6" MIMOSA
8" TOOTHACHE
6" CHINABERRY
(4)HACKBERRY 6"
(3)BOIS D ARC 6"
(2)BOIS D ARC 15"
(3)HACKBERRY 6"
(2)PECAN 18"
(2)PECAN 24"

SIMPSON STUART ROAD

BERMUDA ROAD

UNION PACIFIC R.R.

50' R.O.W.

200' R.O.W.

LOT 2
5038 SIMPSON STUART ROAD
BUNARD WRIGHT
VOL. 79054, PG. 123
D.R.D.C.T.

LOT 3
5044 SIMPSON STUART ROAD
JOHN B. REYNOLDS ETAL
VOL. 89096, PG. 2643
D.R.D.C.T.

LOT 4
5040 SIMPSON STUART ROAD
ORLEANNE REYNOLDS
VOL. 69148, PG. 1134
D.R.D.C.T.

BLOCK 8004
SAM HOUSTON HEIGHTS
VOL. 7, PG. 303

BLOCK 8004

EX. 8" WW (Q172OG, SH. 10-A)

EX. 6" C.I. WATER (F.B. 327, PG. 57)

STA. 0+00 ~ LINE "W-2"
• PAV. STA. 15+09 (6'LT.)
REMOVE EX. 8" 45° BEND
CONNECT TO EX. 8" WATER (N.)
CUT & PLUG EX. 8" WATER (W.)

STA. 0+53 ~ LINE "W-2"
• PAV. 15+03 (45'RT.)
INSTALL:
1 ~ 8" 45° HORIZ. BEND
1 ~ 8" X 6" REDUCER
1 ~ 6" VALVE
CONNECT TO EX. 6" WATER (S.)
CUT & PLUG EX. 6" WATER (N.)

STA. 0+27 ~ LINE "W-2"
• PAV. STA. 15+09 (21'RT.)
INSTALL:
1 ~ 8" X 6" TEE (BBF)
1 ~ 6" VALVE (FMJ)
30 L.F. 6" PVC CL. 200 WATER PIPE
1 ~ FIRE HYDRANT
REMOVE & DELIVER EXIST. F.H. PER D.W.U. REQUIREMENTS

STA. 0+35 & 0+42.5
~ LINE "W-2"
INSTALL:
2 ~ 8" 11.25° VERT. BENDS

STA. 0+46 ~ LINE "W-2"
• PAV. STA. 15+09 (40'RT.)
INSTALL:
1 ~ 8" 45° HORIZ. BEND

LINE "W-2"
INSTALL 8" WATER
FOR PROFILE SEE 685W-452 SH. 25

ABANDON EX. 6" WATER
BUILT UNK

CAUTION!!!
CONTACT:
TXU Gas: 1-800-344-8377
Southwestern Bell: 1-800-344-8377
TXU Electric: 1-800-344-8377
AND OTHER RELEVANT AUTHORITIES AT LEAST 48 HOURS PRIOR TO BEGINNING CONSTRUCTION

CAUTION!!!
UNDERGROUND GAS MAINS CALL 1-800-344-8377 FOR ON-SITE LINE LOCATION AT LEAST 48 HOURS PRIOR TO BEGIN CONSTRUCTION

CONT. NO. #00-057F/058F

barbed wire fence

MATCH MARK ~ PAV. STA. 20+02.8 = 5+00 ~ 12" WATER LINE "W-1"
SEE SHEET 23

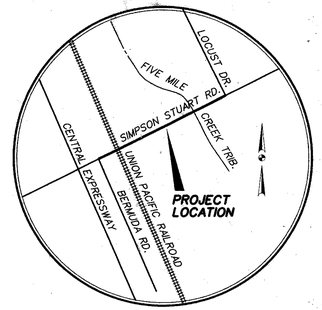

VICINITY MAP
NOT TO SCALE
MAPSCO: 67-K

GENERAL NOTES

1. THE EXISTING WATER LINES IS TO BE USED AS SERVICE LINE UNTIL THE NEW WATER MAIN HAS BEEN TESTED, APPROVED AND PLACED INTO SERVICE.
2. CONTRACTOR TO ENSURE THAT EXISTING FIRE HYDRANTS ARE ACCESSIBLE TO FIRE TRUCKS AT ALL TIME.
3. ABANDON VALVES ON ABANDONED WATER MAINS. NO SEPARATE PAY ITEM.
4. TEMPORARY PAVING IS TO BE USED OVER ALL STREET, DRIVE AND SIDEWALK CUTS WITHIN PROPOSED PAVING LIMITS; OUTSIDE PROPOSED PAVING LIMITS, PERMANENT PAVING IS TO BE USED.
5. THE CONTRACTOR SHALL PROVIDE FOR THE DIVERSION OF PEDESTRIANS AND VEHICLES DURING THE PROGRESS OF WORK IN A MANNER SATISFACTORY TO THE CONSTRUCTION ENGINEER.
6. ALL EXISTING UTILITIES SHOWN ARE APPROXIMATE LOCATIONS AND DEPTHS. EXACT LOCATIONS AND DEPTHS SHALL BE VERIFIED BY THE CONTRACTOR BEFORE BEGIN CONSTRUCTION. THE CONTRACTOR IS RESPONSIBLE FOR THE PROTECTION OF ALL EXISTING UTILITIES.
7. ALL BENDS, TEES, F.H.'S AND PLUGS ARE TO BE RESTRAINED TYPE FITTINGS.
8. THE CONTRACTOR SHALL MAINTAIN EXISTING WASTEWATER FLOW AND SERVICES AT ALL TIMES. NO SEPARATE PAY ITEM.
9. THE CONTRACTOR SHALL VERIFY THE LOCATION OF EXISTING WASTEWATER LATERALS. EXISTING WASTEWATER LATERALS ARE TO BE REPLACED FROM THE PROPOSED WASTEWATER MAIN TO THE PROPERTY LINE WITH CLEAN-OUTS, AND RECONNECT TO THE EXISTING LATERALS FOR ALL EXISTING BUILDINGS. CLEARING ALL EXISTING OR PROPOSED UTILITIES AND PAVEMENT, CONSTRUCT LATERALS WITH CLEAN-OUTS AND CAPS TO ALL VACANT LOTS. DEEP CUT CONNECTIONS MAY BE REQUIRED.
10. ALL PROPOSED WATER MAINS SHALL HAVE A MINIMUM 4' OF COVER MEASURED FROM THE TOP OF PIPE TO THE NEAREST PROPOSED TOP OF CURB.
11. EXISTING FIRE HYDRANTS ON MAINS BEING ABANDONED ARE TO BE REMOVED AND DELIVERED TO WATER UTILITIES YARD AT 4120 SCOTTSDALE DRIVE OR AS DIRECTED BY THE CONSTRUCTION ENGINEER.
12. ALL WATER SERVICES ARE TO BE REPLACED FROM THE PROPOSED WATER MAIN TO THE METER, CLEARING ALL EXISTING OR PROPOSED UTILITIES AND PAVEMENT. RELOCATE AND RESET ALL WATER METERS AS REQUIRED AND RECONNECT TO EXISTING BUILDING SERVICES. INSTALL WATER DEADHEADS TO THE CENTER OF VACANT LOTS.
13. POWER POLES MAY HAVE TO BE BRACED AT CONTRACTOR'S EXPENSE. CONTACT TXU ELECTRIC AT 1-800-344-8377 AND S.W.B.T. AT 1-800-344-8377.
14. NO LANES SHALL BE BLOCKED FROM 7 A.M. TO 9 A.M. AND 4 P.M. TO 6 P.M.
15. CONTRACTOR SHALL PLACE AND COMPACT FILL TO FINAL DENSITY PRIOR TO INSTALLATION OF WATER AND WASTEWATER MAINS.

W.W. MAP	WATER MAP
55-32S	55-32W
BUD HOLCOMB	KEY MAP
I-16, I-17	H-14

BENCHMARKS

B.M. 1 STD. W.D.B.M. IN WEST CONC. HEADWALL OF A 2'X5'X126' CONCRETE BOX CULVERT UNDER CENTRAL EXPRESSWAY (U.S HWY. #75) AND 92' NORTH OF THE CENTERLINE OF SIMPSON STUART ROAD. ELEV. 404.74

B.M. 2 RAILROAD SPIKE IN POWER POLE #5100 AT THE CORNER OF SIMPSON STUART ROAD AND BERMUDA ROAD. ELEV. 405.84

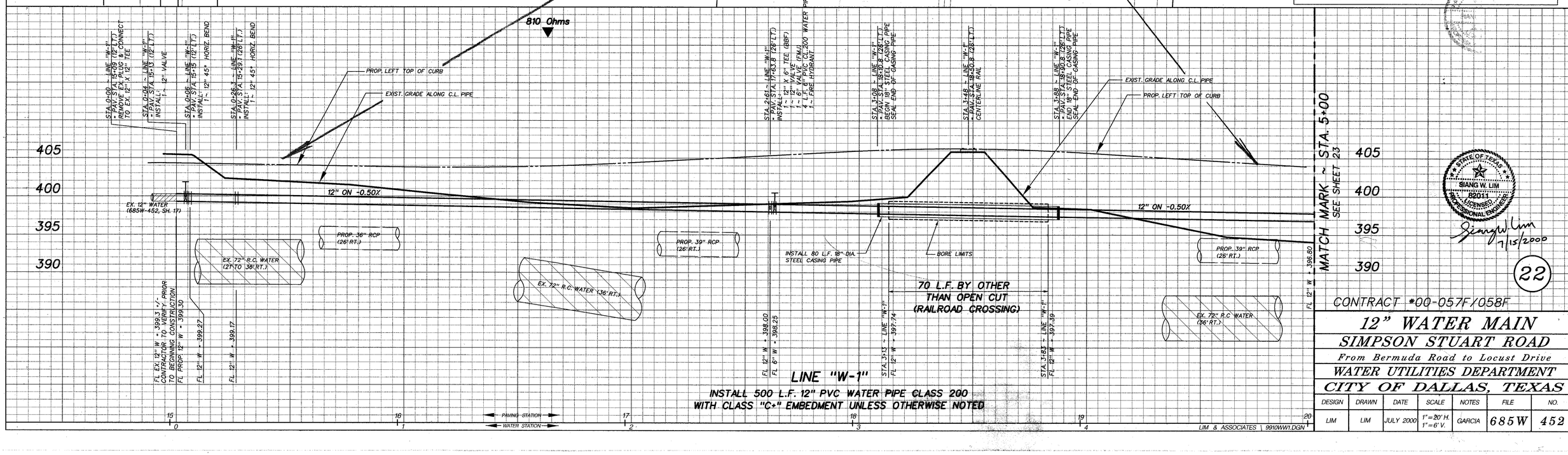

STATE OF TEXAS
SIANG W. LIM
80011
LICENSED PROFESSIONAL ENGINEER
Siang W. Lim
7/15/2000

22

CONTRACT #00-057F/058F

12" WATER MAIN
SIMPSON STUART ROAD
From Bermuda Road to Locust Drive
WATER UTILITIES DEPARTMENT
CITY OF DALLAS, TEXAS

DESIGN	DRAWN	DATE	SCALE	NOTES	FILE	NO.
LIM	LIM	JULY 2000	1"=20' H. 1"=6' V.	GARCIA	685W	452

LIM & ASSOCIATES | 9910WW1.DGN

© 1999 Dallas Water Utilities\Projects\9910WW1\9910WW1.dgn Jul 15, 2000 13:01:16

LINE "W-1"
INSTALL 12" WATER

STA. 5+11 ~ LINE "W-1"
= PAV. STA. 20+13.8 (26' LT.)
INSTALL:
1 ~ 12" X 6" TEE (BBF)
1 ~ 12" VALVE
1 ~ 6" VALVE (FMJ)
44 L.F. 6" PVC CL. 200 WATER PIPE
1 ~ FIRE HYDRANT

STA. 7+61 ~ LINE "W-1"
= PAV. STA. 22+63.8 (26' LT.)
INSTALL:
1 ~ 12" X 6" TEE (BBF)
1 ~ 12" VALVE
1 ~ 6" VALVE (FMJ)
4 L.F. 6" PVC CL. 200 WATER PIPE
1 ~ FIRE HYDRANT

STA. 10+11 ~ LINE "W-1"
= PAV. STA. 25+13.8 (26' LT.)
INSTALL:
1 ~ 12" X 6" TEE (BBF)
1 ~ 12" VALVE
1 ~ 6" VALVE (FMJ)
44 L.F. 6" PVC CL. 200 WATER PIPE
1 ~ FIRE HYDRANT

BLOCK 8002
CITY OF DALLAS

BLOCK 8002
CITY OF DALLAS

TREE REMOVAL BY OTHERS
SEE STREET PAVING PLANS

PROP. CURB (TYP.)
PROP. 4' WALK (TYP.)
PROP. 12" WATER
PROP. 39" RCP
PROP. 27" RCP
PROP. 24" RCP
EX. 72" R.C. WATER (685W-552, SH. 1)
24" GAS
MH
R.O.W.
ST. ARSENAL CROSSING

SIMPSON STUART ROAD

CITY OF DALLAS
BLOCK 8003

CITY OF DALLAS
BLOCK 8003

MATCH MARK ~ PAV. STA. 20+02.8
= STA. 5+00 ~ 12" WATER LINE "W-1"
SEE SHEET 22

MATCH MARK ~ PAV. STA. 25+52.8
= STA. 10+50 ~ 12" WATER LINE "W-1"
SEE SHEET 24

CAUTION!!!
CONTACT:
TXU Gas: 1-800-344-8377
Southwestern Bell: 1-800-344-8377
TXU Electric : 1-800-344-8377
AND OTHER RELEVANT AUTHORITIES AT LEAST 48 HOURS PRIOR TO BEGINNING CONSTRUCTION

CAUTION!!!
UNDERGROUND GAS MAINS CALL 1-800-344-8377 FOR ON-SITE LINE LOCATION AT LEAST 48 HOURS PRIOR TO BEGIN CONSTRUCTION

CONT. No. 00-057F/00-058F

W.W. MAP 55-32S
WATER MAP 55-32W
BUD HOLCOMB 1-16, 1-17
KEY MAP H-14
SEE 685W-452 SH.22 FOR LOCATION MAP & GENERAL NOTES

BENCHMARKS

B.M. 3 RAILROAD SPIKE IN 8" HACKBERRY TREE LOCATED NORTH OF SIMPSON STUART ROAD, ALIGNED 50' EAST OF THE UNION PACIFIC PROPERTY LINE AND 75' FROM EDGE OF EXIST ASPHALT.
ELEV. 396.99

B.M. 4 5/8" I.R.S. LOCATED SOUTH OF SIMPSON STUART ROAD, ALIGNED AT APPROX. STA. 25+00 AND 75' FROM EDGE OF EXIST. ASPHALT PAVEMENT
ELEV. 396.21

810 Ohms

PROP. LEFT TOP OF CURB
EXIST. GRADE ALONG C.L. PIPE

12" ON -0.50%
12" ON 0.00%
12" ON +0.63%

PROP. 39" RCP (26' RT.)
EX. 72" WATER (38' RT.)

FL 12" W = 396.80
FL 6" W = 397.00
FL 12" W = 396.75
FL 12" W = 395.50
FL 6" W = 395.75
GRADE BREAK
FL 12" W = 395.75

LINE "W-1"
INSTALL 550 L.F. 12" PVC WATER PIPE CLASS 200 WITH CLASS "C" EMBEDMENT

PAVING STATION
WATER STATION

STATE OF TEXAS
SIANG W. LIM
80011
LICENSED PROFESSIONAL ENGINEER
Siang W. Lim
7/15/2000

23

CONTRACT #00-057F/058F

12" WATER MAIN
SIMPSON STUART ROAD
From Bermuda Road to Locust Drive
WATER UTILITIES DEPARTMENT
CITY OF DALLAS, TEXAS

DESIGN	DRAWN	DATE	SCALE	NOTES	FILE	NO.
LIM	LIM	JULY 2000	1"=20' H. 1"=6' V.	GARCIA	685W	452

10 LIM & ASSOCIATES \9910WW2.DGN
e:\standards\archive\dbs\1395p01 JUL 15, 2000 02:13:05

LINE "W-1"
INSTALL 12" WATER

BLOCK 8002
CITY OF DALLAS

STA. 12+61 ~ LINE "W-1"
= PAV. STA. 27+63.8 (26' LT.)
INSTALL:
1 ~ 12" X 6" TEE (BBF)
1 ~ 12" VALVE
1 ~ 6" VALVE (FMJ)
4 L.F. 6" PVC CL. 200 WATER PIPE
1 ~ FIRE HYDRANT

STA. 14+66 ~ LINE "W-1"
= PAV. STA. 29+68.8 (26' LT.)
INSTALL:
1 ~ 12" X 6" TEE (BBF)
1 ~ 12" VALVE
1 ~ 6" VALVE (FMJ)
45 L.F. 6" PVC CL. 200 WATER PIPE
1 ~ FIRE HYDRANT

TREE REMOVAL BY OTHERS SEE STREET PAVING PLANS

SEE SHEET 23
MATCH MARK ~ PAV. STA. 25+52.8
= 10+50 ~ 12" WATER LINE "W-1"

MATCH MARK ~ PAV. STA. 31+02.8
= 16+00 ~ 12" WATER LINE "W-1"
SEE SHEET 25

PROP. 4' WALK (TYP.)
PROP. CURB (TYP.)
PROP. 39" RCP
PROP. 4' WALK (TYP.)
PROP. CURB (TYP.)
24" GAS
PROP. 4' WALK (TYP.)
GARVEL DRWY
9 BOLLARD
EX. WOODEN BRIDGE
PROP. 12" WATER
15" WW
SEE SHEET 26
PROP. 24" RCP
EX. 72" R.C. WATER (685W-552, SH. 2)
Natural gas line marker
WEIGHT SEMENT
PROP. 24" RCP
GRAVEL DRWY

SIMPSON STUART ROAD

CITY OF DALLAS
BLOCK 8003

CITY OF DALLAS
BLOCK 8003

15" WW LINE "S-1"
SEE SHEET 26

CAUTION!!!
CONTACT:
TXU Gas: 1-800-344-8377
Southwestern Bell: 1-800-344-8377
TXU Electric : 1-800-344-8377
AND OTHER RELEVANT AUTHORITIES AT LEAST 48 HOURS PRIOR TO BEGINNING CONSTRUCTION

CAUTION!!!
UNDERGROUND GAS MAINS CALL 1-800-344-8377 FOR ON-SITE LINE LOCATION AT LEAST 48 HOURS PRIOR TO BEGIN CONSTRUCTION

FIVE MILE CREEK TRIB

CONT. No. 00-057F/00-058F

SEE 685W-452 SH. 22 FOR LOCATION MAP & GENERAL NOTES

W.W. MAP	WATER MAP
55-32S	55-32W
BUD HOLCOMB	KEY MAP
I-16, I-17	H-14

BENCHMARKS

B.M.4 5/8" I.R.S. LOCATED SOUTH OF SIMPSON STUART ROAD. ALIGNED AT APPROX. STA. 25+00 AND 75' FROM EDGE OF EXIST. ASPHALT PAVEMENT.
ELEV. 396.21

B.M.5 RAILROAD SPIKE IN 10" HACKBERRY TREE LOCATED 50' EAST OF EXIST. WOODEN BRIDGE AND 75' NORTH OF EXIST ACCESS ROAD ASPHALT EDGE.
ELEV. 395.42

810 Ohms

PROP. LEFT TOP OF CURB
EXIST. GRADE ALONG C.L. PIPE

12" ON +0.63%
12" ON 0.00%
12" ON -0.35%

PROP. 39" RCP (26' RT.)
PROP. 24" RCP (26' RT.)

PROP. 2 - 10'x 5'BOX CULVERT
SEE PAVING & DRAINAGE PLANS FOR DETAILS

EX. 72" WATER (RT.)
EX. 72" WATER (RT.)
EX. 72" WATER (RT.)

FL 12" W = 395.75
FL 12" W = 397.08
FL 6" W = 397.33
GRADE BREAK
FL 12" W = 397.08
FL 6" W = 397.33
GRADE BREAK
FL 12" W = 396.61

405
400
395
390
385

MATCH MARK ~ STA 10+50
SEE SHEET 23
MATCH MARK ~ STA 16+00
SEE SHEET 25

LINE "W-1"
INSTALL 550 L.F. 12" PVC WATER PIPE CLASS 200 WITH CLASS "C+" EMBEDMENT

PAVING STATION
WATER STATION

LIM & ASSOCIATES \ 9910WW3.DGN

STATE OF TEXAS
SIANG W. LIM
82011
LICENSED PROFESSIONAL ENGINEER
Siang W. Lim
7/15/2000

24

CONTRACT #00-057F/058F

12" WATER MAIN
SIMPSON STUART ROAD
From Bermuda Road to Locust Drive
WATER UTILITIES DEPARTMENT
CITY OF DALLAS, TEXAS

DESIGN	DRAWN	DATE	SCALE	NOTES	FILE	NO.
LIM	LIM	JULY 2000	1"=20' H. 1"=6' V.	GARCIA	685W	452

e:\projects\dallas\9910ww3\dgn\9910ww3.dgn, Oct 15, 2000 01:56:28

SEE SHEETS 24 & 26

MATCH MARK ~ PAV. STA. 31+02.8
= STA. 16+00 ~ 12" WATER LINE "W-1" - SH. 24
= STA. 3+74.1 ~ 15" WASTEWATER LINE "S-1" - SH. 26

LINE "W-1"
INSTALL 12" WATER

STA. 17+28 ~ LINE "W-1"
- PAV. STA. 32+30.8 (26' LT.)
INSTALL:
1 ~ 12" X 6" TEE (BBF)
1 ~ 6" VALVE (FMJ)
5 L.F. 6" PVC CL. 200 WATER PIPE
1 ~ FIRE HYDRANT

STA. 18+87 ~ LINE "W-1"
- STA. 0+00 ~ LINE "W-3"
- PAV. STA. 33+89.8 (26' LT.)
INSTALL:
1 ~ 12" X 12" TEE
1 ~ 12" VALVE

STA. 19+11 ~ LINE "W-1"
- PAV. STA. 34+13.8 (26' LT.)
INSTALL:
1 ~ 12" VALVE
1 ~ 12" X 12" TEE
(ROTATE AS REQUIRED)
1 ~ 12" PLUG (E.)

STA. 19+11 ~ LINE "W-1" (14'+/- RT)
- PAV. STA. 34+13.8 (+/- 12' LT.)
REMOVE EX. 12" X 12" TEE &
INSTALL 14+/- L.F. 12" PVC CL. 200 WATER PIPE
CONNECT TO EX. 12" WATER (S.)
CUT & PLUG EX. 12" WATER (W.)
CUT & PLUG EX. 6" WATER (E.)

LINE "W-3"
INSTALL 12" WATER

ABANDON EX. 8" & 12" WATER
BUILT 1958

STA. 0+13 ~ LINE "W-3"
- PAV. STA. 33+89.8 (37' LT.)
INSTALL:
1 ~ 12" X 6" TEE (BBF)
1 ~ 6" VALVE (FMJ)
1 ~ 12" PLUG @ FL 12" = 395.50
9 L.F. 6" PVC CL. 200 WATER PIPE
1 ~ FIRE HYDRANT
REMOVE & DELIVER EXIST. F.H.
PER D.W.U. REQUIREMENTS

STA. 0+30 ~ LINE "S-2"
- PAV. STA. 33+75 (36' LT.)
END 10" WASTEWATER
INSTALL WW ACCESS DEVICE

STA. 6+46 ~ LINE "S-1"
- STA. 0+00 ~ LINE "S-2"
- PAV. STA. 33+75 (6' LT.)
CONSTRUCT 4' DIA. WW MANHOLE
END 15" WASTEWATER (W.)
BEGIN 10" WASTEWATER (N.)
BEGIN 12" WASTEWATER (E.)

STA. 6+89 ~ LINE "S-1"
- PAV. STA. 34+19 (6' LT.)
END 12" WASTEWATER
INSTALL WW ACCESS DEVICE

LINES "S-1" & "S-2"
CONSTRUCT 15" WW, 12" WW & 10" WW

BLOCK 8002
CITY OF DALLAS

BLOCK 8003
CITY OF DALLAS

SIMPSON STUART ROAD

LOCUST DRIVE

EXIST. 50' R.O.W.
LIMITS OF PROP. CONC. PAVING
PROP. 4' WALK (TYP.)
PROP. CURB (TYP.)
PROP. 24" RCP
PROP. 27" RCP
EX. 72" R.C. WATER (685W-552, SH. 2)
EX. 72" R.C. WATER (685W-552, SH. 3)
EX. 12" WATER (685-W-552, SH. 3)
EX. 6" WATER (685-W-552, SH. 3)
24" GAS
PROP. 12" WATER
PROP. 4' WALK (TYP.)
PROP. CURB (TYP.)
LIMITS OF PROP. CONC. PAVING
PROP. 4' WALK (TYP.)
4+00 5+00 6+00 17+00 18+00 19+00 32+00 33+00 34+00 35+00
R.O.W. 60' 30' 6' 20' 12' 4' 2' 8" 15" 10" 12"

CAUTION!!!
UNDERGROUND GAS MAINS
CALL 1-800-344-8377 FOR
ON-SITE LINE LOCATION
AT LEAST 48 HOURS PRIOR
TO BEGIN CONSTRUCTION

CAUTION!!!
CONTACT:
TXU Gas: 1-800-344-8377
Southwestern Bell: 1-800-344-8377
TXU Electric Co.: 1-800-344-8377
AND OTHER RELEVANT AUTHORITIES
AT LEAST 48 HOURS PRIOR TO
BEGINNING CONSTRUCTION

SEE 685W-452 SH. 22 FOR LOCATION MAP & GENERAL NOTES

W.W. MAP 55-32S | WATER MAP 55-32W

BUD HOLCOMB I-16, I-17 | KEY MAP H-14

STATE OF TEXAS
SIANG W. LIM
82011
LICENSED
PROFESSIONAL ENGINEER
10/20/2000

1 REVISED OCT. 20, 2000 - CHANGED LINE "S-2" FROM 12" WW TO 10" WW. CHANGED LOCATION OF LINE "W-3" TO 15' EAST OF CENTERLINE OF LOCUST DR.

BENCHMARKS

B.M. 5 RAILROAD SPIKE IN 10" HACKBERRY TREE LOCATED 50' EAST OF EXIST. WOODEN BRIDGE AND 75' NORTH OF EXIST. ACCESS ROAD ASPHALT EDGE.
ELEV. 395.42

B.M. 6 RAILROAD SPIKE IN 32" COTTON TREE LOCATED ON WEST SIDE OF LOCUST DRIVE AND 180' NORTH OF SIMPSON STUART ROAD.
ELEV. 398.61

PVI STA. 17+28 ~ LINE "W-1"
- PAV. STA. 32+30.8 (26' LT.)
INSTALL:
1 ~ 12" X 6" TEE (BBF)
1 ~ 6" VALVE (FMJ)
5 L.F. 6" PVC CL. 200 WATER PIPE
1 ~ FIRE HYDRANT

PROP. LEFT TOP OF CURB
EXIST. GRADE ALONG C.L. PIPE
PROP. 24" RCP (RT.)
12" ON -0.35%
810 Ohms
12" ON -0.50%
FL 12" W = 396.16
FL 12" W = 396.61
STA. 4+10 ~ LINE "S-1" PROP. 24" RCP
FL 12" W = 396.16
FL 8" W = 396.41 GRADE BREAK
WATER STATION
FL 12" W = 395.33
FL 12" W = 395.25

LINE "W-1"
INSTALL 314 L.F. 12" PVC WATER PIPE CLASS 200 CLASS "C" EMBEDMENT

STA. 18+87 ~ LINE "W-1"
- STA. 0+00 ~ LINE "W-3"
- PAV. STA. 33+89.8 (26' LT.)
INSTALL:
1 ~ 12" X 12" TEE
1 ~ 12" VALVE

STA. 19+11 ~ LINE "W-1"
- PAV. STA. 34+13.8 (26' LT.)
INSTALL:
1 ~ 12" VALVE
1 ~ 12" X 12" TEE (ROTATE AS REQUIRED)
1 ~ 12" PLUG (E.)

STA. 6+46 ~ LINE "S-1"
- STA. 0+00 ~ LINE "S-2"
- PAV. STA. 33+75 (6' LT.)
CONSTRUCT 4' DIA. WW MANHOLE
END 15" WASTEWATER (W.)
BEGIN 12" WASTEWATER (E.)
BEGIN 10" WASTEWATER (N.)

STA. 6+89 ~ LINE "S-1"
- PAV. STA. 34+19 (6' LT.)
END 12" WASTEWATER
INSTALL WW ACCESS DEVICE

PROP. LEFT TOP OF CURB
EXIST. GRADE ALONG C.L. PIPE
PROP. 24" RCP FL = 395.94
PROP. 24" RCP (6' RT.)
15" ON 0.15%
12" ON 0.20%
EX. 72" WATER (16' RT.)
EX. 72" WATER (16' RT.)
FL 15" WW = 387.12
FL 15" WW = 387.53 (W.)
FL 12" WW = 387.53 (E.)
FL 10" WW = 387.53 (N.)
FL 15" WW = 387.62

LINE "S-1"
272 L.F. 15" PVC & 43 L.F. 12" PVC WASTEWATER PIPE
ASTM D3034 (SDR 35), ASTM F949
OR ASTM F789/D3212 WITH
CLASS "B-2" EMBEDMENT

PAVING STATION
WW STATION

SCANNED May 2002
by E. Gifford

STA. 0+00 ~ LINE "W-2"
- PAV. STA. 15+09 (6' LT.)
INSTALL: 15+/- L.F. 8" WATER (W.)
CONNECT TO EX. 8" WATER (W.)
CUT & PLUG EX. 8" WATER (E.)

STA. 0+06 ~ PROP. 36" RCP
STA. 0+16 ~ EX. 72" WATER
STA. 0+27 ~ EX. 3" GAS
PVI STA. 0+35 ~ LINE "W-2"
INSTALL 8" HORIZ. BEND
INSTALL 8" 11°25' VERT. BEND
PVI STA. 0+42.5 ~ LINE "W-2"
INSTALL 8" 11°25' VERT. BEND
INSTALL 8" 45° HORIZ. BEND
STA. 0+53 ~ LINE "W-2"
INSTALL 15+/-L.F. 8" WATER (W.)
INSTALL 15+/-L.F. 8" WATER (E.)
INSTALL 8" 45° HORIZ. BEND
INSTALL 8" X 6" REDUCER
EX. 6" C.I. WATER (F.B. 327, PG. 57)
CONNECT TO EX. 8" WATER (S.)
CONNECT TO EX. 8" WATER (N.)
CUT & PLUG EX. 6" WATER

EXIST. GRADE ALONG C.L. PIPE
PROP. TOP OF PVMT. ALONG C.L. PIPE
8" ON -19.69%
8" ON 0.00%
8" ON 0.00%
EX. 8" WATER
EX. 6" C.I. WATER (F.B. 327, PG. 57)
EX. 3" GAS ELEV. = UNK.
PROP. 36" RCP FL = 389.37
FL EX. 8" WATER = 399.5 +/- (CONTRACTOR TO VERIFY)
FL 8" WATER = 399.59
EX. 72" WATER 388.5 +/-
FL 8" WATER = 399.50
FL 8" WATER = 401.00
FL 8" WATER = 401.00
FL EX. 6" WATER = 400.0 +/- (CONTRACTOR TO VERIFY)

LINE "W-2"
INSTALL 53 L.F. 8" PVC WATER PIPE
CLASS 200 W/ CLASS "C" EMBEDMENT
(FOR PLAN VIEW SEE SH. 22)

STA. 0+00 ~ LINE "S-2"
- PAV. STA. 33+75 (6' LT.)
CONSTRUCT 4' DIA. WW MANHOLE
END 10" WASTEWATER (N.)
BEGIN 10" WASTEWATER (W.)

STA. 0+20 ~ PROP. 12" WATER
STA. 0+30 ~ LINE "S-2"
- PAV. STA. 33+75.36 (1' LT.)
END 10" WASTEWATER (E.)
INSTALL WW ACCESS DEVICE

PROP. TOP OF PVMT. ALONG C.L. PIPE
EXIST. GRADE ALONG C.L. PIPE
CROSS EX. 12" W (FIELD VERIFY)
10" ON 0.25%
FL 10" WW = 387.81

LINE "S-2"
30 L.F. 10" PVC WASTEWATER PIPE
ASTM D3034 (SDR 35), ASTM F949
OR ASTM F789/D3212 WITH
CLASS "B-2" EMBEDMENT

FL 15" WW = 387.53 (W.)
FL 12" WW = 387.53 (E.)
FL 10" WW = 387.53 (N.)

25

CONTRACT #00-057F/058F

WATER & WASTEWATER
SIMPSON STUART ROAD
From Bermuda Road to Locust Drive
WATER UTILITIES DEPARTMENT
CITY OF DALLAS, TEXAS

DESIGN	DRAWN	DATE	SCALE	NOTES	FILE	NO.
LIM	LIM	OCT 2000	1"=20' H. 1"=6' V.	GARCIA	685W	452

LIM & ASSOCIATES \ 9910WW4.DGN

I:\DGN\9910\ACTIVE\9910WW4.DGN 10/20/2000 14:14:11

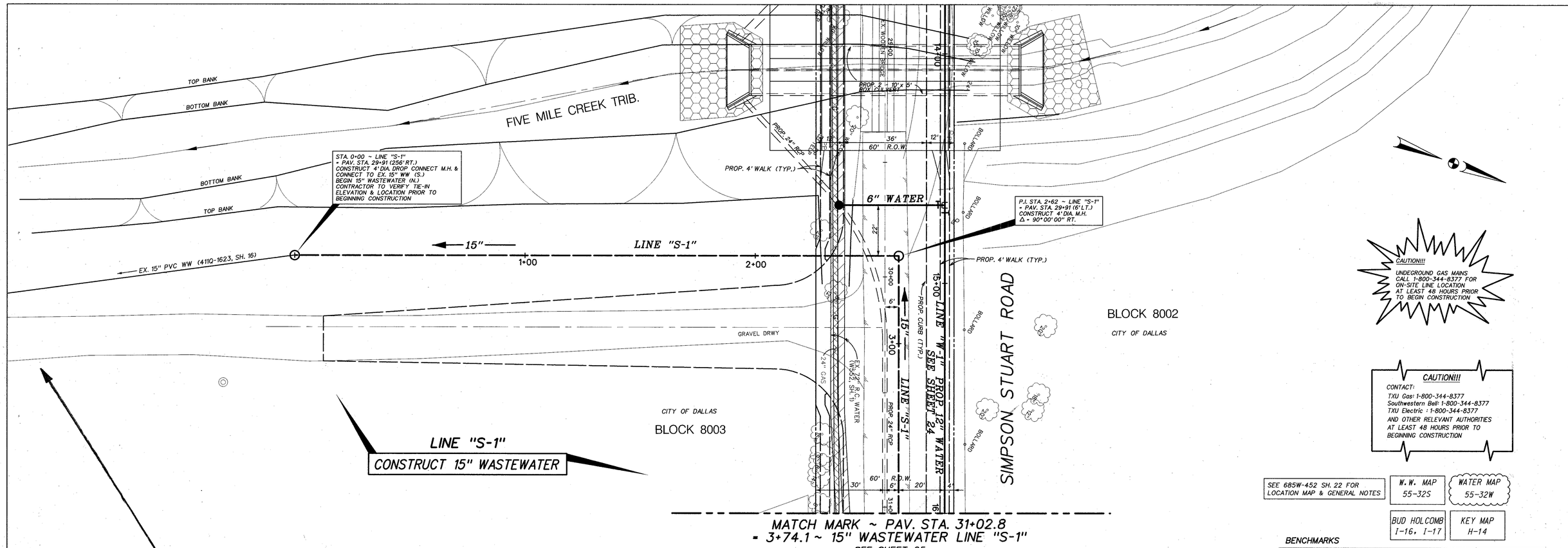

26

CONTRACT #00-057F/058F

15" WASTEWATER MAIN

SIMPSON STUART ROAD

From Bermuda Drive to Locust Drive

WATER UTILITIES DEPARTMENT

CITY OF DALLAS, TEXAS

DESIGN	DRAWN	DATE	SCALE	NOTES	FILE	NO.
LIM	LIM	JULY 2000	1"=20' H. 1"=6' V.	GARCIA	685W	452

SIMPSON STUART ROAD

DALLAS ECO BUSINESS PARK ADDITION

LOCUST DRIVE

DALLAS ECO BUSINESS PARK ADDITION

SCALE: 1"=20'

EX. 12" WATER (685W-452, SH. 25)
16'
33+00
6'
20'
4'
12'
36' F.C.-F.C.
60' R.O.W.
12'
OE
PP
EX. 15" PVC WW (685W-452, SH. 25) ABANDONED
EX. 4' WALK (TYP.)
EX. CURB (TYP.)
EX. R.O.W.
EX. 21" RCP
EX. INLET
30'
60' R.O.W.
15'
10+00
11+00
12+00
13+00
14+00
WWMH
EX. 48" RCP
(BUILT 2002) EX. 10" PVC WW (685W-452, SH. 27)
EX. 10" CONC. PVMT.
EX. 8" WATER (685W-452, SH. 27)
EX. 6" WATER (685W-452, SH. 27)
EX. 8" PVC WW (685W-452, SH. 27)
SSCO
PROP. 24' DRIVE
LIMITS OF PROP. CONC. PAVING
EX. DIRT/GRAVEL TRANSITION
LINE "S-3"
10" WW
LINE "W-4"
12" WATER
EX. 12" WATER ABANDONED
EX. 8" WW (685W-452, SH. 25)
34+00
F.H.
FUTURE CONC. WALK
PROP. CURB (TYP.)
EX. 6" W
4' WALK (TYP.)
24" GAS
EX. 72" R.C. WATER (685W-552, SH. 3)
30'
(BUILT 2002) EX. 12" PVC WATER (685W-452, SH. 27)

STA. 0+00 ~ LINE "S-3"
- EX. WW STA. 3+80 LINE "S-2"
- PAV. STA. 14+15
BEGIN 10" WASTEWATER (N.)
REMOVE EX. PLUG &
CONNECT TO EX. 10" WW (S.)

ADJUST EX. C.O. AS PER STD. DRAWINGS PG. 404

STA. 0+55 ~ LINE "S-3"
- PAV. STA. 14+70
END 10" WASTEWATER
INSTALL STD. WW ACCESS DEVICE

EX. WW STA. 3+75
EX. RIM ELEV. 403.0 +/- TO BE ADJUSTED TO PROP. RIM ELEV. 403.60 AS PER STD. DRAWINGS PG. 401

ADJUST WATER VALVE STACK TO MATCH PROPOSED PAVING GRADE AS PER STD. DRAWINGS PG. 404

STA. 0+51.5 ~ LINE "W-4"
- PAV. STA. 14+70 (15' RT.)
END 12" WATER & PLUG
1-1" Flush Point

STA. 0+00 ~ LINE "W-4"
- EX. WATER STA. 3+80 LINE "W-3"
- PAV. STA. 14+18.5 (15' RT.)
BEGIN 12" WATER (N.)
REMOVE EX. PLUG &
CONNECT TO EX. 12" WATER (S.)

CAUTION!!!
CONTACT:
LONE STAR GAS: 1-800-344-8377
SOUTHWESTERN BELL: 1-800-395-0440
TU ELECTRIC CO.: 1-800-242-9113
AND OTHER RELEVANT AUTHORITIES AT LEAST 48 HOURS PRIOR TO BEGINNING CONSTRUCTION

LINE "W-4"
INSTALL 12" WATER

LINE "S-3"
CONSTRUCT 10" WASTEWATER

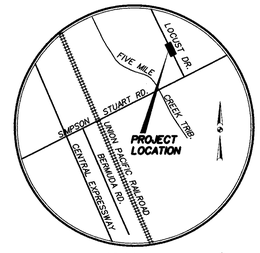

VICINITY MAP
NOT TO SCALE
MAPSCO: 67-F

W.W. MAP	WATER MAP 54-32W
BUD HOLCOMB I-16, I-17	KEY MAP H-14

GENERAL NOTES:

1. All water mains shall be PVC, Class 200.
2. All 6" through 15" wastewater mains where PVC pipe is used shall be ASTM 3034 (SDR-35) or ASTM F789/D3212.
3. Extend water deadheads and wastewater laterals 2' beyond proposed curb or as shown.
4. Water and wastewater easements shall also include additional area of working space for construction and maintenance of the system.
5. The maximum allowable trench width for all pipe through 12" diameter shall be 32".
6. The Certificate of Acceptance (COA) will not be issued until all water and wastewater appurtenances have been adjusted to their final position.
7. All valves and fire hydrants shall have restrained type fittings.

CONTRACTOR SHALL PROTECT EX. MANHOLE DURING CONSTRUCTION.
CARE SHOULD BE TAKEN TO KEEP DEBRIS OUT OF M.H. DURING CONSTRUCTION.
FALSE M.H. BOTTOM SHALL BE INSTALLED DURING CONSTRUCTION.
FALSE M.H. BOTTOM TO BE REMOVED AFTER CONSTRUCTION IS COMPLETE.

BENCHMARKS

B.M. 1 STD. W.D.B.M. IN WEST CONC. HEADWALL OF A 2'X5'X126' CONCRETE BOX CULVERT UNDER CENTRAL EXPRESSWAY (U.S. HWY NO. 75) AND 92' NORTH OF THE CENTERLINE OF SIMPSON STUART ROAD. ELEV. 404.74

B.M. 2 RAILROAD SPIKE IN 10" HACKBERRY TREE LOCATED 50' EAST OF EXIST WOODEN BRIDGE AND 75' NORTH OF EXIST ACCESS ROAD ASPHALT EDGE. ELEV. 395.42

B.M. 3 RAILROAD SPIKE IN 32" COTTON TREE LOCATED ON WEST SIDE OF LOCUST DRIVE AND 180' NORTH OF SIMPSON STUART ROAD. ELEV. 398.61

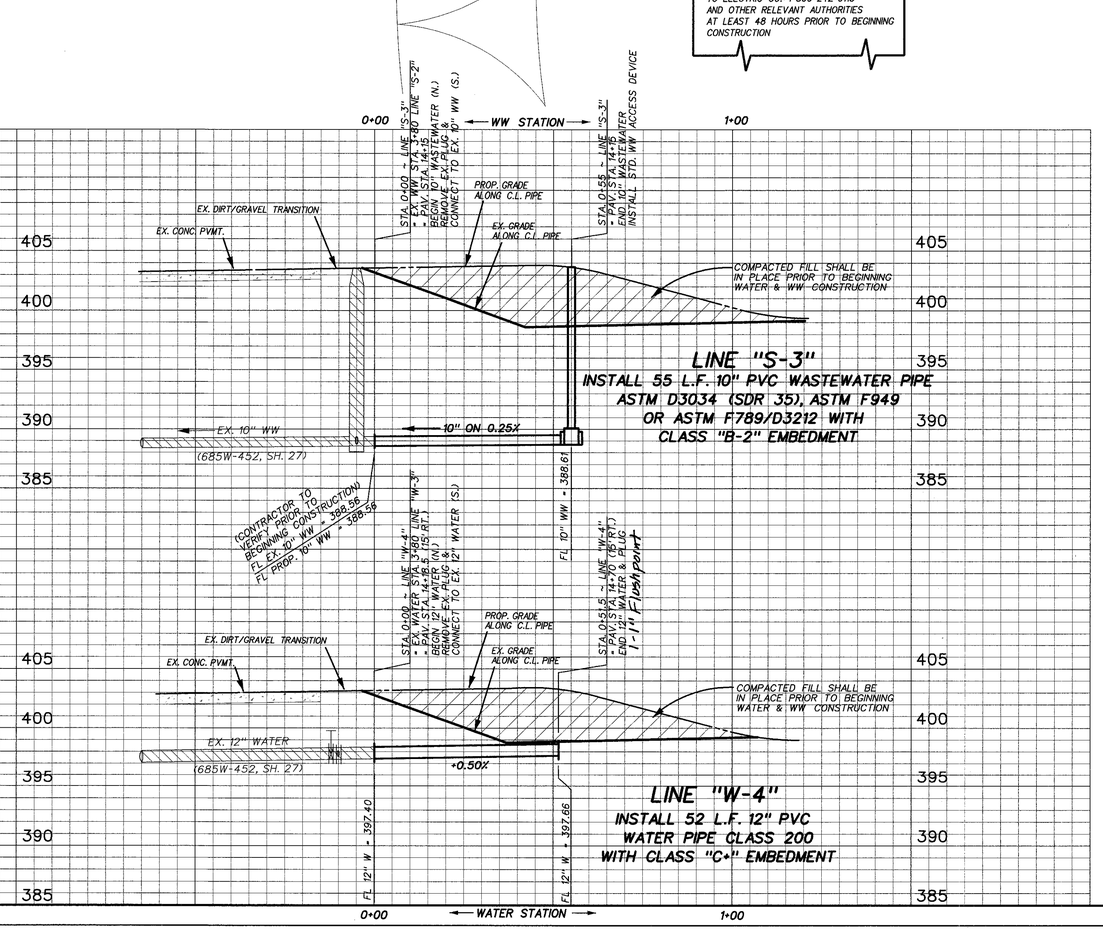

LINE "S-3"
INSTALL 55 L.F. 10" PVC WASTEWATER PIPE ASTM D3034 (SDR 35), ASTM F949 OR ASTM F789/D3212 WITH CLASS "B-2" EMBEDMENT

LINE "W-4"
INSTALL 52 L.F. 12" PVC WATER PIPE CLASS 200 WITH CLASS "C-1" EMBEDMENT

STATE OF TEXAS
SIANG W. LIM
82011
LICENSED PROFESSIONAL ENGINEER

Designed By: _____ Date 9-19-02
Lim & Associates, Inc. ~ Consulting Civil Engineers
Nancy Vaughn Date 9/25/02
Dallas Water Utilities
Contract No. 02-443/444J Date _____
Contractor Abstract Construction Co.

27A

CITY PLAN FILE NO. S012-111

WATER & WASTEWATER
LOCUST DRIVE
FROM PAVING STA. 13+80 TO 14+60
WATER UTILITIES DEPARTMENT
CITY OF DALLAS, TEXAS

DESIGN	DRAWN	DATE	SCALE	NOTES	FILE	NO.
LIM	LIM	SEP. 2002	1"=20' H. 1"=6' V.	GARCIA	685W	452

REVISED ~ SEPTEMBER 9, 2002

2206WW1.DGN

C:\projects\1996\2206\ww1\2206ww1.dgn 19 Sep 2002 15:34:46

AT&T
Leo Orgo
821-6590
HIGHWAY APPROVAL
For three 12" water lowerings along west side of SOUTH CENTRAL EXPRESSWAY (U.S. 75)
Approval Date ~ Jan. 26, 1973
BLK. 8011
ABST. 380
BLK. 8012
W.O. 19126-R
0+36 Conn. To Exist. 12" C.I. Water, Install 2-12" 45° Vert. Bends 1-WET CONNECTION
0+00 Conn. To Exist. 12" C.I. Water, Install 2-12" 45° Vert. Bends 1-WET CONNECTION
0+18 Conn. To Exist. 12" C.I. Water, Install 2-12" 45° Vert. Bends 1-WET CONNECTION
0+00 Conn. To Exist. 12" C.I. Water, Install 2-12" 45° Vert. Bends 1-WET CONNECTION
Install 1-12"x6" Tee 1-6" Valve 1-F.H.
W.O. 15583
Install 12" C.I. Water
P.I. 3+77 Δ=0°37' Lt.
Install: 2-12"x12" C.I. Tees 2-12" Valves 2-12"-45° Bends
242+00 Install: 1-12"x12" C.I. Tee 1-12"x8" Reducer - 1-8" Valve 1-12"-11¼° Bend Connect to exist 12" Valve
1-S.F. HUFFINES SER. STA.
1-S. MASON EZEE GRO.
STUART RD.
0+00-Prop. 12" C.I. Water
Prop. 48" Stm. Sew. Lower 12" C.I. Water Install 4-12" 45° Vert. Bends 2-WET CONN. W.O. 19126-R
BLK. 6863
ABST. 1192
RESISTIVITY TEST
At Central & Simpson Stuart
Resistivity Read 4000 Points 0
Redox Read 70 Points 3.5
pH Read 8.7 Points 3
Sulfides — —
Moisture Content Fair Drainage Points 1
Total Points 7.5
S O U T H C E N T R A L E X P R E S S W A Y
(U.S. HWY NO. 75)
P.I. 1+26.93 Δ 39°48' Rt.
Prop. 48" Storm Sewer
Prop. 60" Storm Sewer
See County Plane 385-372 Sht. 17
INSTALL 12" C.I. WATER
W.O. 17218
Asphalt Service Road
10' Asphalt Shoulder
CONCRETE
CONCRETE
PAVEMENT
PAVEMENT
Plant-Mix Asphalt Service Road
TELEPHONE CABLE
EXIST. 72" WATER MAIN
346 LIN. FT. OF 120" ENCASEMENT PIPE
Install: ALT. #1, 12" 45° BEND ALT. #2, 16" 45° BEND ALT. #3, 18" 45° BEND
ALT. NO. 2 & 3 USE 10 GAGE 48" GALV. CORG. METAL PIPE OR CLASS 3 Wall B 48" R.C.P. AS APPUR. 414D-5. FOR ENCASEMENT PIPE
Type "A" Support As Per Appurt. Sh. 414D-5
Sta. 1+00 Install ALT. #1, 12" PLUG ALT. #2, 16" PLUG ALT. #3, 18" PLUG
INSTALL: ALT. 1, 12" C.I. WATER ALT. 2, 16" D.I. WATER ALT. 3, 18" D.I. WATER
Note! All Left and Rt. Measurements are from The Existing Survey.
Note! Contractor Shall Call S.W. Bell Telephone Co. At RI-7-5311 Sta. 6241 Prior To Construction So They Will Have A Representative Present.
Install: ALT. #1, 12" VALVE ALT. #2, 16" VALVE ALT. 3, 18" VALVE
Install: ALT. #1, 12"x6" TEE ALT. #2, 16"x6" TEE ALT. #3, 18"x6" TEE 1-6" VALVE 1-F.H.
18" GAS DANGER
Exist. Sani. Sew. Survey, by McMinn, on 411Q-1720, Sh. 23
0+00=82+70
22.0 LIN. FT. Street Crossing by Bore, Jack or Tunnel w/ Encasement Pipe
P.I. 1+30.43 = 0-08 Δ = 38°04'20" Rt.
P.I. 0+82.36 Δ=38°06'30" Rt.
Install: ALT. #1, 12" 22½° BEND (2ea.) ALT. #2, 16" 22½° BEND (2ea.) ALT. #3, 18" 22½° BEND (2ea.) ALT. #1, 12"x12" TEE ALT. #2, 16"x16" TEE ALT. #3, 18"x18" TEE ALT. #1, 12" VALVE ALT. #2, 16" VALVE ALT. #3, 18" VALVE ALT #2, 1-16"x12" REDUCER ALT #3, 1-18"x12" REDUCER CONNECT TO EXIST. 12"x16" TEE
Install: ALT. #1, 12" 45° BEND ALT. #2, 16" 45° BEND ALT. #3, 18" 45° BEND
Install: ALT. #1, 12" 90° BEND ALT. #2, 16" 90° BEND ALT. #3, 18" 90° BEND
SIMPSON
WEST SIDE MATCH MARK
EAST SIDE MATCH MARK
CONT NO 70-59-R
BLK. 8005
ABST. 380
BLK. 8001
ABST. 1192
HIGHWAY APPROVAL 12", 16" or 18" Water Along E. R.O.W. - S. Central Expwy. Simpson Stuart to McCommas Bluff 3-23-70
NOTE: BLOCK ALL TEES, BENDS & PLUGS PER APPURT. SH. 414D-15.
NOTE: ON ALL 18" VALVES USE VERTICAL NON-GEARED HUB END VALVES
IN WEST SIDE OF SOUTH CENTRAL EXPRESSWAY
IN EAST SIDE OF SOUTH CENTRAL EXPRESSWAY
933± Lin. ft. 12" C.I. Water Pipe Class 150
Install 18 Lin. Ft. Of 12" C.I. Water Pipe W.O. 19126-R
Install 36 Lin. Ft. Of 12" C.I. Water Pipe W.O. 19126-R
1050± Lin. ft. 12" C.I. Water Pipe Class 200
" " " 16" D.I. Water Pipe Class 1
" " " 18" D.I. Water Pipe Class 1
Laying Condition ("B" in Earth)("F" in Rock) For 12" & 16" F-2 for 18" in Earth or Rock.
20 LIN. FT. W.O. 19126-R 12" C.I. WATER PIPE
This Was Open Cut
B.M.: Water Department Bench Mark on concrete hdwl. on Northwest corner of Central Expressway & Simpson-Stuart Road. ELEV. - 404.74
DESIGNED HOMER A. HUNTER ASSOCIATES ENGINEERS DATE: Mar. 17, 1970 Revised Mar. 26, 1970
R.O.W. APPROVED: DATE: 4-28-70
ENGINEER OF DESIGN - DALLAS CITY WATER UTILITIES DEPT. DATE: 4-6-1970
CONTRACT NO. 70-59-R DATE:
STATE OF TEXAS H. G. HOWARD, JR. 7574 REGISTERED PROFESSIONAL ENGINEER
1
C.I. WATER MAIN
IN So. CENTRAL EXPRESSWAY
FROM SIMPSON-STUART SOUTH
DALLAS CITY WATERWORKS
CITY OF DALLAS, TEXAS
DESIGN REVISED - Campbell
DRAWN KINSLOW Love Malloy
DATE 2-70 10-61
SCALE Hori. 1"=40' Vert. 1"=6'
NOTES LOWRY 405-14
FILE 685W-452-B

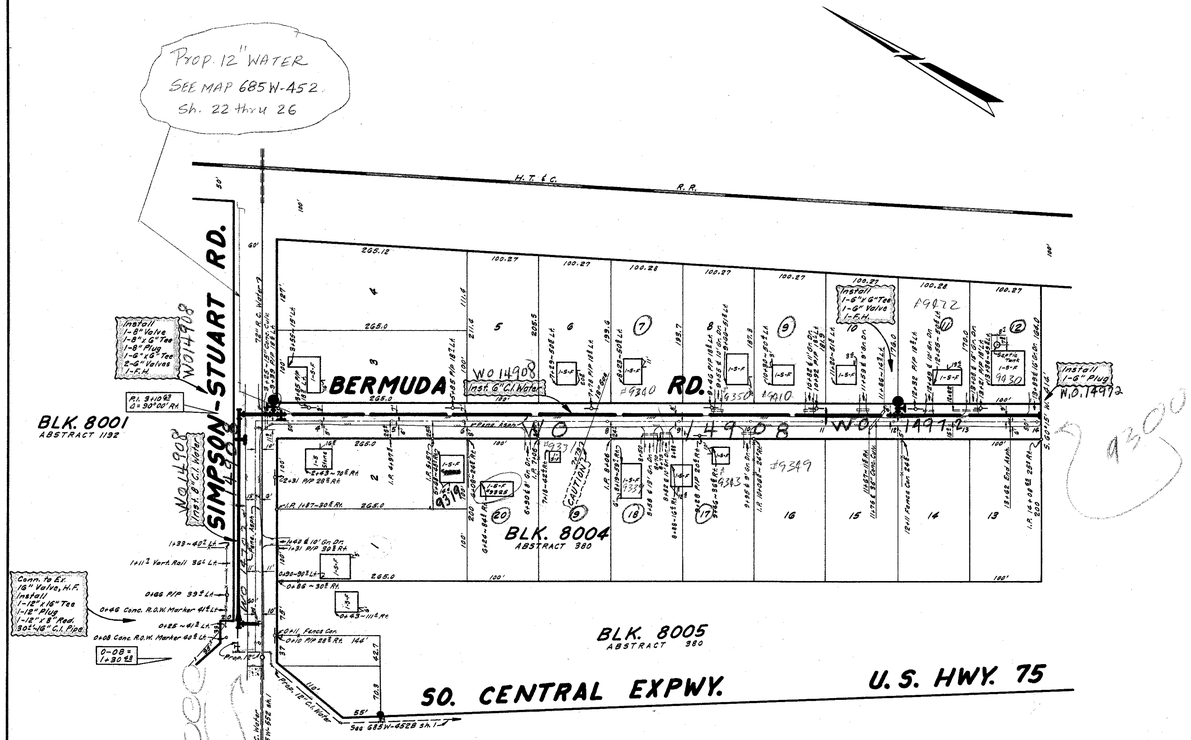

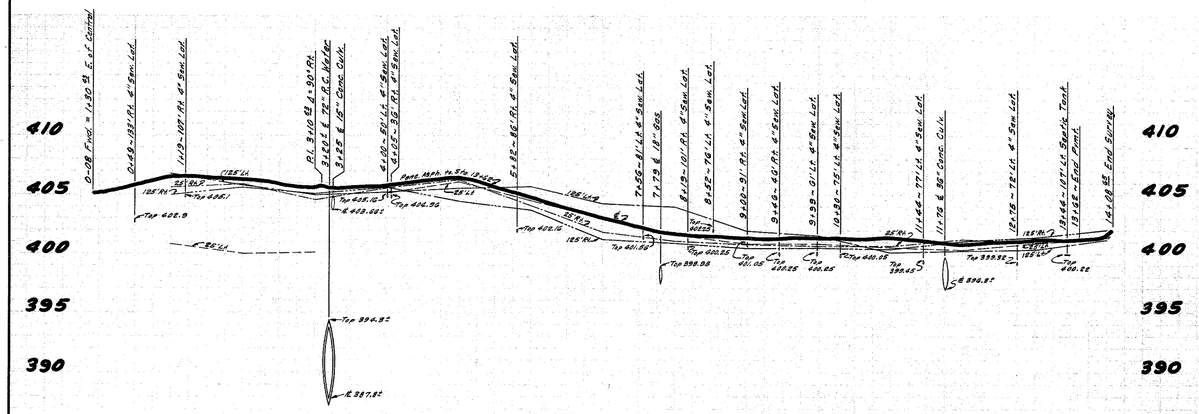

6" C.I. & 8" C.I. WATER
IN BERMUDA ROAD & SIMPSON-STUART ROAD, E. OF CENTRAL
DALLAS CITY WATERWORKS
CITY OF DALLAS, TEXAS

DESIGN	DRAWN	DATE	SCALE	NOTES	FILE	NO.
JACK D. CAMPBELL	JOHN B. PARRISH, JR.	JUNE 1962	HORIZ. 1"=100' VERT. 1"=6'	LOWRY 4-09-76	685W	452-C

(1)

INSTALL 870 L.F.OF 8" PVC (DR-14) WATER PIPE - CLASS 200
CLASS "C" EMBEDMENT

Kill Ex.6" Water Built 1962

0 20' 40' 80'

N

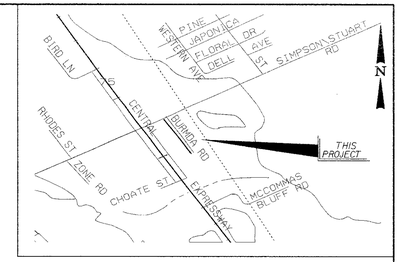

LOCATION MAP
MAPSCO 67 J & K

Bud Holcomb	W.W. Map	Water Map
1-17S	55 - 32S	55 - 32W

0+00 Water
Install:
1 - 8" Valve
Remove Ex.8" x 45° Horz.Bend
Connect to Ex.8" PVC Water Pipe

4+56 Water
Install:
1 - 8" Valve
1 - 8" X 6" Tee
1 - 6" Valve
10 ± LF Of 6" PVC Water Pipe
1-FH As Per DWU Std Dwg # 224

8+53 Water
Remove & Deliver Ex.FH
Install:
1 - 8" Valve
1 - 8" X 6" Tee
1 - 6" Valve
10 LF Of 6" PVC Water Pipe
1-FH As Per DWU Std Dwg # 224

10+51 Water
End Prop Water main
Install:
180 L.F. of 6" PVC Water Pipe
1 - 1" Blow-off
1 - 6" Plug

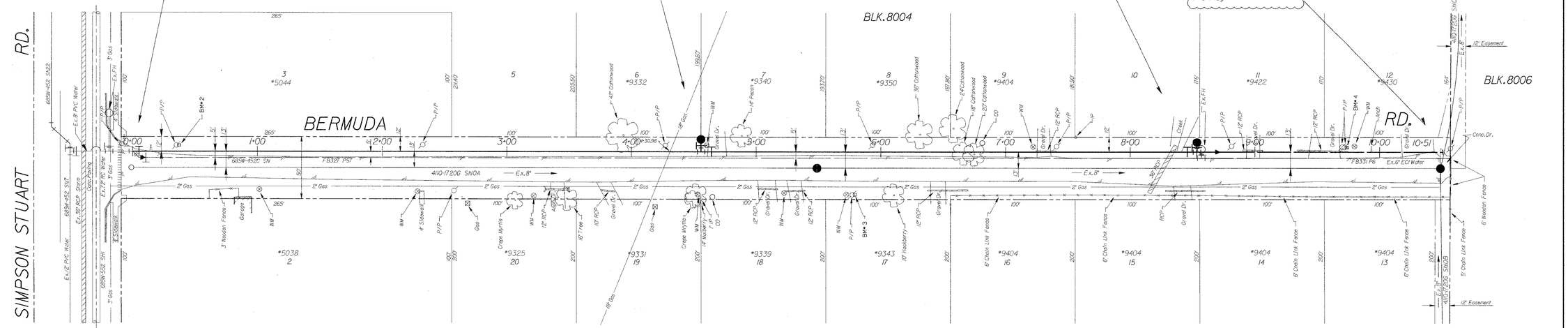

CAUTION ~ GAS !
Existing Gas Main In Area
Contact ATMOS Energy Corp. Two Working
Days Prior To Construction.
Tele: 1-800-344-8377 / 1-800-545-6005

CAUTION ~ O.H. POWER !
Existing O.H. Electrical Cables In Area
Contact ONCOR Two Working
Days Prior To Construction.
Tele: 1-800-344-8377 / 214-875-2256

ONLY AS NECESARY:
CONTRACTOR TO REMOVE CULVERTS &
PUT TO ORGINAL CONDITION OR BETTER.
"NO SEPERATE PAY ITEM"

BM#1 Std.WDBM in Center of Conc.Hdwl.Conn. to a 2'X5'X126' Conc.Box Culvert Under Central Expressway and Simpson Stuart Rd.
Elev. 404.74'

BM#2 Set RR Spike In PP#7S5E63 East Side of Bermuda Rd.
Elev. 406.49'

BM#3 Set RR Spike In PP#7S5E67 West Side of Bermuda Rd. and 550'+/- From C.L. of Simpson Stuart Rd.
Elev. 401.54'

BM#4 Set RR Spike In PP#7S5EI77 on East Side of Bermuda Rd. and 1000'+/- From C.L. of Simpson Stuart Rd.
Elev. 402.92'

BM#5 Square □ w/ Cut "X" In Center on Top Curb @ E.End of 10' Storm Sewer Inlet on N. Side of Simpson Stuart Rd. and About 215' +/- W. of C.L. Locust St.
Elev. 402.15'

General Notes

1. All existing utilities shown at approximate locations and depths are based on the best available records and limited field data. The engineer does not certify that all utilities are shown. Exact locations and depths shall be verified by the contractor before beginning construction. The contractor is responsible for the protection of all existing utilities. No separate pay item.
2. The Contractor shall coordinate all tie-ins with the on-site DWU Inspector.
3. The existing water line shall remain in service until the proposed main has been tested, approved and placed in service. No separate pay item.
4. The Contractor shall ensure that existing fire hydrants are accessible to fire trucks at all times.
5. Abandon all valves on abandoned water mains as per DWU Standard Drawing pg. 219. No separate pay item.
6. All bends, tees, fire hydrants and plugs are to be restrained type fittings. Fire hydrants shall be installed per DWU Standard Drawing pg. 224.
7. Compact Fittings are not authorized for this project.
8. All bends will be blocked with Class B concrete as per DWU Standard Drawing pg. 229-234.
9. Polywrap should be used on all cast iron fittings and fire hydrant bases.
10. Temporary paving is to be used over all street, drive and sidewalk cuts within proposed paving limits. Permanent paving is to be used outside proposed paving limits.
11. CAUTION! Existing underground utilities involved. Call DIG TESS At 1-800-344-8377 48 hours prior to construction for the location of any underground utilities involved in the area. No separate pay item.
12. If Directed To Do So, Remove and Deliver Existing Fire Hydrants to 2901 Municipal Street. Give at least twenty-four (24) hours notice, prior to delivering the fire hydrants. 214-670-8035
13. Power poles will have to be braced at Contractor's expense. Contact TXU Electric at 800-242-9113 and AT&T Cable at 800-344-8377. No separate pay item.
14. Contractor to remove existing culverts under driveways along alignment and replace to origional condition or better. No separate pay item.
15. All Water Mains With No Profile Shall Have A Minimum Cover As Follows: 6", 8", 10" & 12": 48" Below Finished Street Grade Or 60" Depth Below Unimproved Grade.
16. All Proposed Water Mains Shall Be Class 200 (DR 14) Class C Embedment.
17. The contractor shall replace any pavement markings and signs that are removed or damaged during contructions. No Sepate Pay Item.
18. The ground survey was performed by Public Works on 11/28/2003. The design relies on the assumptions provided by the survey.
19. All Items of Work Required to Complete The Work As Shown or Implied By The Plans And As Specified In The Contract Documents Which Are Not Listed As A Pay Item In The Proposal Shall Be Considered Subsidiary.

STATE OF TEXAS
BEN A. STEPHENSON
55023
LICENSED PROFESSIONAL ENGINEER
1/28/08

05-543 WATER
05-544 WASTEWATER

remote\water\misc\contract02-007e\bermuda\Bermuda.dgn

(2)

8" WATER MAIN

BERMUDA RD.

OFF OF SIMPSON STUART RD.

WATER UTILITIES DEPARTMENT
CITY OF DALLAS, TEXAS

DESIGN	DRAWN	DATE	SCALE	NOTES	FILE	NO.
B.ELLIS	B.ELLIS	JAN. 2008	1" = 40' H. 1" = 6' V.	Cont# 02-007	685W	452C

PIPE CROSSING HIGHWAY
Pipe shall be tunneled, bored or jacked in place and encased. Casing shall be approximately same size as bored hole and shall extend for full length of bored portion. No trench excavation shall be carried closer than 10 ft. of all pavement edges. No dirt from trench excavation shall be piled on roadway shoulders. All trench backfill shall be mechanically tamped to same density as surrounding ground. Before completion of this proposed work all roadway shoulders, slopes, ditches and berms shall be restored to their original condition.
72" R.C. Water in SIMPSON STUART RD.
Hwy. Approval Letter Dated 8-14-59
Block 6863
Lot 1
Min Floor Elev. 407.0'
0+00 72" EAST = 242+74.3 WEST
ONE STORY FRAME #9281
ONE STORY CONC. BLOCK BLDG. EZEE ~ SHOP REG. U.S. PAT. OFF. #9305
No. 75
U.S. HIGHWAY
Asph. Penet. Pavement
Dividing Strip
346 LIN. FT. OF 120" ENCASEMENT PIPE
5'x2.25'x124' CONC. BOX CULVERT
Concrete Pavement
Asph. Penet. Pvmt.
Plant Mix Asphalt
GRAVEL
POLE LINE
685W-553 Sheet 20
Future 8" C.I. W. 685W-553 sh. 20
Future 12" C.I. W.
Prop. 12" WATER 685W-452 Sheet 9
BLK. 8012
ABSTRACT 380
GENERAL NOTES:
ALL VERTICAL AND HORIZONTAL BENDS AND BEVELS SHALL BE BLOCKED FOR THRUST AS PER APPURT SHEET 414D-15 OR AS DIRECTED BY FIELD ENGINEER.
CONTRACT NO 60-200
3+70 Install: 1-16" Flange Outlet North 1-16" Valve Flg. H.F.
SIMPSON · STUART ROAD
ASPHALT PENETRATION PAVEMENT
PROP. 24" GAS
3+47.06 P.I. Δ-01°27'45" Lt. Pull Pipe
INST. 72" R.C. WATER PIPE
3+20 Construct 4.5' Dia. Brick Manhole At End Of Encasement Pipe. 18" Flange Outlet Up and 18" Blind Flange.
ONE STORY FRAME RES.
ONE STORY ROCK RES.
BLK. 8005
ABSTRACT 380
Alice Turner Mussina, a widow, Hugh O. Mussina, Robert W. Mussina, Frederick W. Mussina, and Warren E. Mussina
21.5'x75' Street and water main easement Sta. 3+47± to 4+22
Blk. 8005
C.O. 61-3752
County Records Vol. 5621 Pg. 472 Date 9-11-61
BERMUDA ROAD
8004
BLK. 8001
ABSTRACT 1192
RAILROAD
SOUTHERN · PACIFIC
10+01.5 to Mile Post No. 257
100 LIN. FT. OF 120" ENC. PIPE
BLK. 8002
ABSTRACT 1192
8003
STATION 12+00
MATCH LINE
TEMPORARY WORKING SPACE
10+52 Construct 4.5' Dia. Brick Manhole At End Of Encasement Pipe. 18" Flange Outlet Up and 18" Blind Flange.
PLAN VIEW
NOT TO SCALE
120" Liner Plate
2000# Conc. Cradle Tapered
Edge of Liner Plate
℄ 72" Carrier Pipe
75' or 4-Joints of Pipe Whichever is Least
PLAN OF TUNNEL APPROACHES
Hold down jack
120" Liner Plates
Fill Voids With Pea Gravel Or Grout
Continues 2000# Concrete Cradle Throughout Tunnel.
2000# Concrete Cradle Shall Begin at Each End of Liner & Extend Out 75' Or 4 Joints, Whichever is Least.
Width of conc. cradle to taper from width of Encasement Pipe to width of Carrier Pipe.
TUNNEL CROSS SECTION
NO SCALE
406.5 HIGH WATER MARK
CONTRACT NO. 60-200
Brown Sandy Clay With Limestone Particles
W.S. 4-27-59
Gray & Tan Sandy Clay
SEE 685W-553 SHT. 20 FOR THIS SECTION
Tan Silty Sand
2000# Conc. Cradle
75' Embedment See Detail Above Left.
8" Thick Brick Closure With 1½ Thick Coat Of Cement Mortar On Outside Each End.
INSTALL: 72" R.C. WATER PIPE
-0.10%
-4.83%
-0.05%
72" Pipe Thickness
2000# Conc. Tapered For Embedment, See Detail
405
400
395
390
385
380
346 LIN. FT. OF 120" ENCASEMENT PIPE
HIGHWAY CROSSING
346 LIN. FT. OF 120" GALVANIZED CIRCULAR TUNNEL LINER PLATE
ALT. A ARMCO 10 GAGE. ALT. B TRUSCON 3/16" PLATE PANELS OUT.
ALT. C COMMERCIAL 3/16" PLATE PANELS OUT.
Voids between Liner Plates & earth or rock shall be filled with pea gravel or grout.
Carrier Pipe shall be supported on continuous 2000# conc. cradle.
Contractor shall furnish 2 hold down jacks per joint As per Appurt. Sheet 414D-11
RAILROAD CROSSING
100 LIN. FT. OF 120" GALVANIZED CIRCULAR TUNNEL LINER PLATE
ALT. A ARMCO 5 GAGE. ALT. B TRUSCON 1/4" PLATE PANELS OUT. ALT. C COMMERCIAL 1/4" PLATE PANELS OUT.
VOIDS BETWEEN LINER PLATE & EARTH OR ROCK SHALL BE FILLED WITH PEA GRAVEL OR GROUT.
CARRIER PIPE SHALL BE SUPPORTED ON A CONTINUOUS 2000# CONCRETE CRADLE.
CONTRACTOR SHALL FURNISH 2 HOLD DOWN JACKS PER JOINT AS PER APPURT. SHEET 414D-11.
LINE LEGEND
120' TO 143' RIGHT
118' TO 150' LEFT
LEFT PROPERTY LINE
RIGHT PROPERTY LINE
ROAD DITCH - 37' TO 40' LEFT
℄ PAVEMENT
BENCH MARK:
WATER DEP'T. DISC ON CONCRETE HEADWALL - NORTHWEST CORNER OF CENTRAL EXPRESSWAY & SIMPSON-STUART ROAD - ELEV. 404.74
1224 LIN. FT. 72" DIA. PRESTRESSED CONC. WATER PIPE WITH EMBEDDED CYLINDER FOR 150 P.S.I. INTERNAL PRESSURE
ALTERNATE - DOUBLE WRAP PRETENSIONED CONCRETE CYLINDER PIPE AS ABOVE
CLASS 3 EMBEDMENT, EXCEPT AS NOTED
Designed By: C. L. Moon, Inc. Engineers
Approved By: Wm. S. Mogle, Jr. July 17-1959
Engineer of Design Dallas City Waterworks
72" WATER MAIN
SOUTHCLIFF RESERVOIR TO LAKE JUNE ROAD
DALLAS CITY WATERWORKS
CITY OF DALLAS, TEXAS
DESIGN C.L. MOON ENG'RS.
DRAWN B.B.M.
DATE OCT., '58
SCALE Hor: 1"=40' Vert: 1"=6'
NOTES Folder Sandefer
FILE 685-W-552
NO. 1

BLK. 8002
ABSTRACT 1192

STATION 12+00

13+02 - 14" Pecan 33$ Lt.
13+26 - Pole - 40$ Lt.
15+75 - Pole - 39$ Lt.
18+26 - Pole - 46$ Lt.

CONTRACT NO. 60-200

SIMPSON · STUART ROAD

1152.9

ASPHALT PENETRATION PAVEMENT

PROPOSED 24" GAS

TEMPORARY WORKING SPACE

13+20 - Install: 16" Flg. Outlet - South 16" Valve H.F.

14+00 - Construct Std. Manhole & Pilot Outlet As Per Appurt. Sheet 414D-11

15+73 - 20" Pecan 7' Rt.

16+85 - 20" Pecan - 2$ Rt.

INSTALL: 72" R.C. WATER PIPE

17+00 P.I. Δ = 3°00' Rt.
Install: Bevel Bend

19+00 P.I. Δ = 3°00' Lt.
Install: Bevel Bend

Stabilized Backfill & Rip Rap As Per Appurt. Sheet 414D-7

20+14$ Wood Wingwall - 43 Lt.
20+95 Wooden Bridge - 105' Lt.
20+35 - High Bank
20+60 Low Bank
20+83 Pole - 50' Lt.
20+93 High Bank
20+98$ Wooden Bridge 103 Lt.
20+95 - Wood Wingwall 57' Lt.

22+08$ Fence

22+00 P.I. Δ = 3°00' Lt.
Install: Bevel Bend

24+00 P.I. Δ = 2°59'25" Rt.
Install: Bevel Bend

STATION 25+00

MATCH LINE

BLK. 8003
ABSTRACT 380

MATCH LINE

14+00 - Pilot Outlet Const. Std. Manhole As Per Appurt. Sh. 414D-11

406.5 HIGH WATER MARK

13+20 - 16" Flg. Outlet

17+00 P.I. Δ 3°00' Rt. Install: Bevel Bend

19+00 P.I. Δ 3°00' Lt. Install: Bevel Bend

22+00 P.I. Δ 3°00' Lt. Install: Bevel Bend

24+00 P.I. Δ 2°59'25" Rt. Install: Bevel Bend

400
395
390
385
380

Stabilized Backfill & Rip Rap As Per Appurt. Sheet 414D-7

Tan Clayey Sand

Brown Sandy Clay With Small Limestone Particles

80' Stabilized Backfill

W.S. 4-20-59

W.S. 4-20-59

Clear below it and remain near the property line for future bridge.

-0.05%

INSTALL: 72" R.C. WATER PIPE

-0.30%

+0.50%

Gray & Tan Sandy Clay

380.25
379.90
379.60
P.V.I. 379.30
Code Break
379.90
380.50
381.10
381.70

CONTRACT NO 60-200

LINE LEGEND

4' TO 15' RIGHT - ROAD DITCH
10' TO 20' RIGHT - PROPERTY LINE
120' RIGHT
10' TO 21' LEFT - ℄ PAVEMENT.
36' TO 45' LT. - ROAD DITCH.
41$ TO 52 LEFT - PROPERTY LINE
150' LEFT.

Designed By: C.L. Moon, Inc. Engineers
Approved By: Wm. S. Mangold July 17-1959
Engineer of Design Dallas City Waterworks

1300 LIN. FT. 72" DIA. PRESTRESSED CONC. WATER PIPE WITH EMBEDDED CYLINDER FOR 150 P.S.I. INTERNAL PRESSURE
ALTERNATE - DOUBLE WRAP PRETENSIONED CONCRETE CYLINDER PIPE AS ABOVE
CLASS 3 EMBEDMENT

BENCH MARK:
R.R. SPIKE IN POLE NO. 75-SE-114
NORTH SIDE OF SIMPSON-STUART ROAD - 1800' EAST OF CENTRAL EXPRESSWAY - ELEV. 394.76

12 13 14 15 16 17 18 19 20 21 22 23 24 25

72" WATER MAIN
SOUTHCLIFF RESERVOIR TO LAKE JUNE ROAD
DALLAS CITY WATERWORKS
CITY OF DALLAS, TEXAS

DESIGN	DRAWN	DATE	SCALE	NOTES	FILE	NO.
C.L. MOON Engrs.	B.B.M.	Nov, '58	H: 1"=40' V: 1"=6'	Folder Sandefer	685-W-552	

C.L. MOON 5114 REGISTERED PROFESSIONAL ENGINEER

2

LOCUST DRIVE

SIMPSON-STUART ROAD

STATION 38+00

STATION 25+00

MATCH LINE

MATCH LINE

ABSTRACT 1192

BLK. 8002

ABSTRACT 1192

BLK. 8003

ABSTRACT 380

BLK. 8003

ABSTRACT 380

ASPHALT PENETRATION PAVEMENT

FUTURE 12" WATER

FUTURE 8" WTR.

FUTURE 6" WTR.

FUTURE 6" WTR.

FUTURE 6" WTR.

PROP. 24" GAS

PROPOSED 24" GAS

40' Temporary Working Space

INSTALL: 72" R.C. WATER PIPE

CONTRACT NO. 60-200

Conn to Exist. 12" Valve. Install: 1-12"x12" Tee, 1-12"x8" Tee, 1-8"x6" Tee, 1-12"x6" Red., 1-12" Valve, 1-8" Valve, 2-6" Valves, 1-F.H.

W.O. 14486

25+55 Install: 12" Flange Outlet 12" Valve Flg. M.J.

27+00 Install: 72"x60" Eccentric Reducers 60" M.E. Gate Valve With 6.5' Dia. Manhole over gears, As per Appurt. Sheet 6140-11

38+00 Install 18" Flg. Outlet, up & Type II Crispin Air Valve. Installation as per Appurt. Sh. 6140-11. For 6" Universal Air Valve, Riser shall be a Min. of 8' Above Ground

Permit Clear - Dont Sell Connections to 72" - Extend the 6"

406.5 HIGH WATER MARK

Locust = 2St 30

25+55 Install: 12" Flange Outlet north

27+00 Install: 60" Gate Valve, H.E. with 5.5' Dia. Manhole over gears

38+00 Install-18" Flg. Outlet, w/ Type II Crispin Air Valve

+ 0.60%

+ 0.10%

INSTALL: 72" R.C. WATER PIPE

W.S. 4-21-59

W.S. 4-20-59

Farmer Silty Sand

Tan Silty Sand

Grey & Tan Sandy Clay

Tan Clayey Sand

Tan Silty Sand

P.V.C. 32+50 386.20

P.V.I. 36+50 386.49 (M0-007)

P.V.T. 39+50 386.55

100' V.C.

P.V.I. 387.00 Grade Break

381.70

382.30

382.90

383.50

384.10

384.70

385.30

385.90

386.60

386.70

386.80

386.90

400

395

390

385

380

1300 LIN. FT. 72" DIA. PRESTRESSED CONC. WATER PIPE WITH EMBEDDED CYLINDER FOR 150 P.S.I. INTERNAL PRESSURE

ALTERNATE- DOUBLE WRAP PRETENSIONED CONCRETE CYLINDER PIPE AS ABOVE

CLASS 3 EMBEDMENT

LINE LEGEND

14' RIGHT - ROAD DITCH

20' RIGHT - PROPERTY LINE

120' RIGHT.

10' TO 11' LEFT - ℄ PAVEMENT.

36' LEFT - ROAD DITCH.

40' LEFT - PROPERTY LINE

140' LEFT.

BENCH MARK:

R.R. SPIKE IN POLE NO. 75-5E-125 3474' EAST OF CENTRAL EXPRESSWAY ON NORTH SIDE OF SIMPSON-STUART ROAD - ELEV. 398.99

Designed By: C.L. Moon, Inc. Engineers

Approved By: Wm L. Mogle Jr. July 17-1959

Engineer of Design Dallas City Waterworks

STATE OF TEXAS C. L. MOON 9414 REGISTERED PROFESSIONAL ENGINEER

3

72" WATER MAIN
SOUTHCLIFF RESERVOIR TO LAKE JUNE ROAD
DALLAS CITY WATERWORKS
CITY OF DALLAS, TEXAS

DESIGN	DRAWN	DATE	SCALE	NOTES	FILE	NO.
C.L. MOON Engrs.	B.B.M.	Nov., '58	H: 1"=40 V: 1"=6	Folder Sandefer	685-W-	552

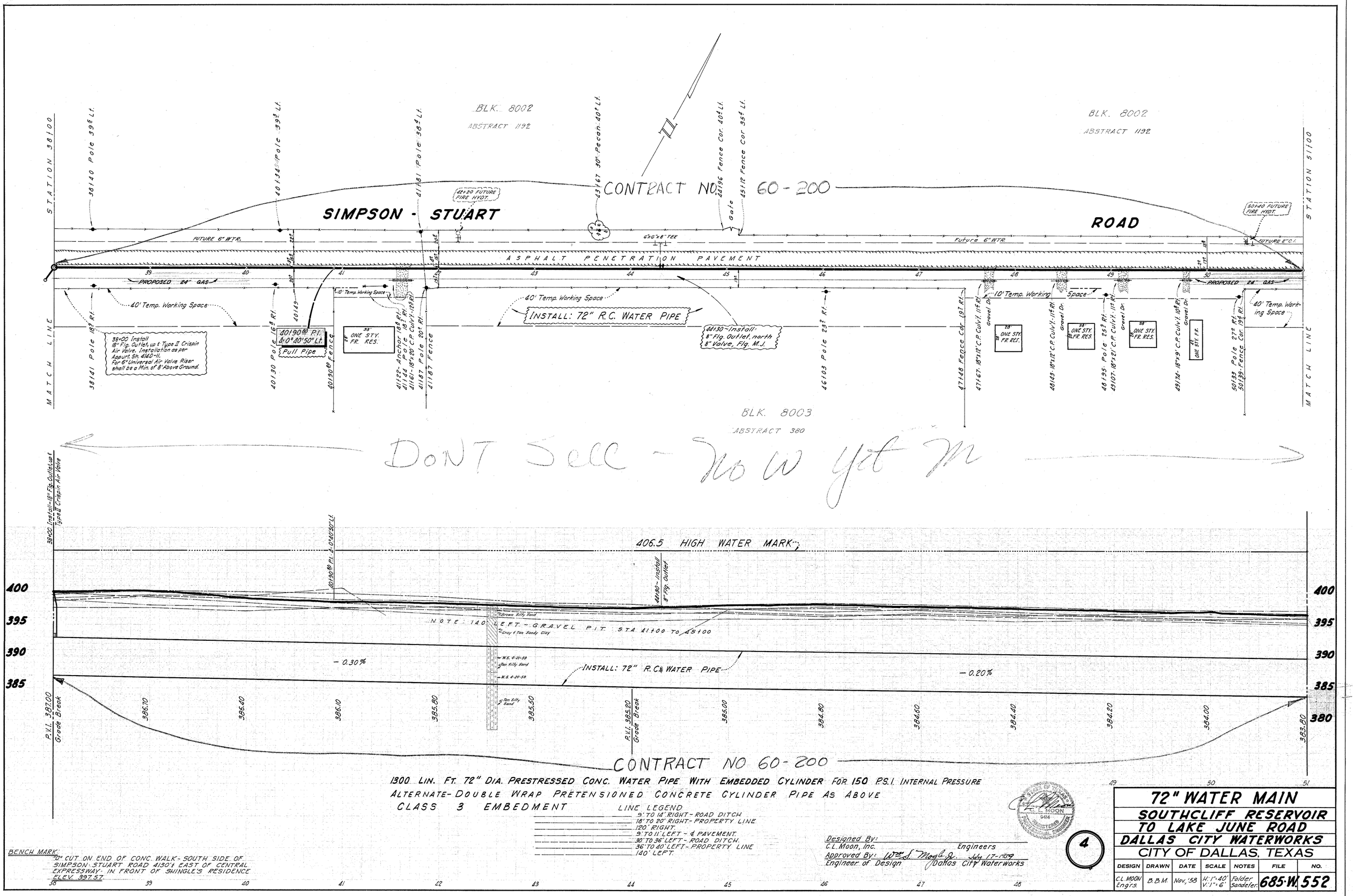

1300 LIN. FT. 72" DIA. PRESTRESSED CONC. WATER PIPE WITH EMBEDDED CYLINDER FOR 150 P.S.I. INTERNAL PRESSURE
ALTERNATE - DOUBLE WRAP PRETENSIONED CONCRETE CYLINDER PIPE AS ABOVE
CLASS 3 EMBEDMENT

LINE LEGEND
9' TO 14' RIGHT - ROAD DITCH
18' TO 20' RIGHT - PROPERTY LINE
120' RIGHT.
9' TO 11' LEFT - ℄ PAVEMENT.
30' TO 36' LEFT - ROAD DITCH.
36' TO 40' LEFT - PROPERTY LINE
140' LEFT.

BENCH MARK:
"D" CUT ON END OF CONC. WALK - SOUTH SIDE OF SIMPSON-STUART ROAD 4130'± EAST OF CENTRAL EXPRESSWAY - IN FRONT OF SHINGLE'S RESIDENCE ELEV. 397.57

Designed By: C.L. Moon, Inc. Engineers
Approved By: Wm. S. Mogle, Jr. July 17-1959
Engineer of Design Dallas City Waterworks

C. L. MOON 9414 REGISTERED PROFESSIONAL ENGINEER

4

72" WATER MAIN
SOUTHCLIFF RESERVOIR TO LAKE JUNE ROAD
DALLAS CITY WATERWORKS
CITY OF DALLAS, TEXAS

DESIGN	DRAWN	DATE	SCALE	NOTES	FILE	NO.
C.L. MOON Engrs.	B.B.M.	Nov. '58	H: 1" = 40' V: 1" = 6'	Folder Sandefer	685-W	552