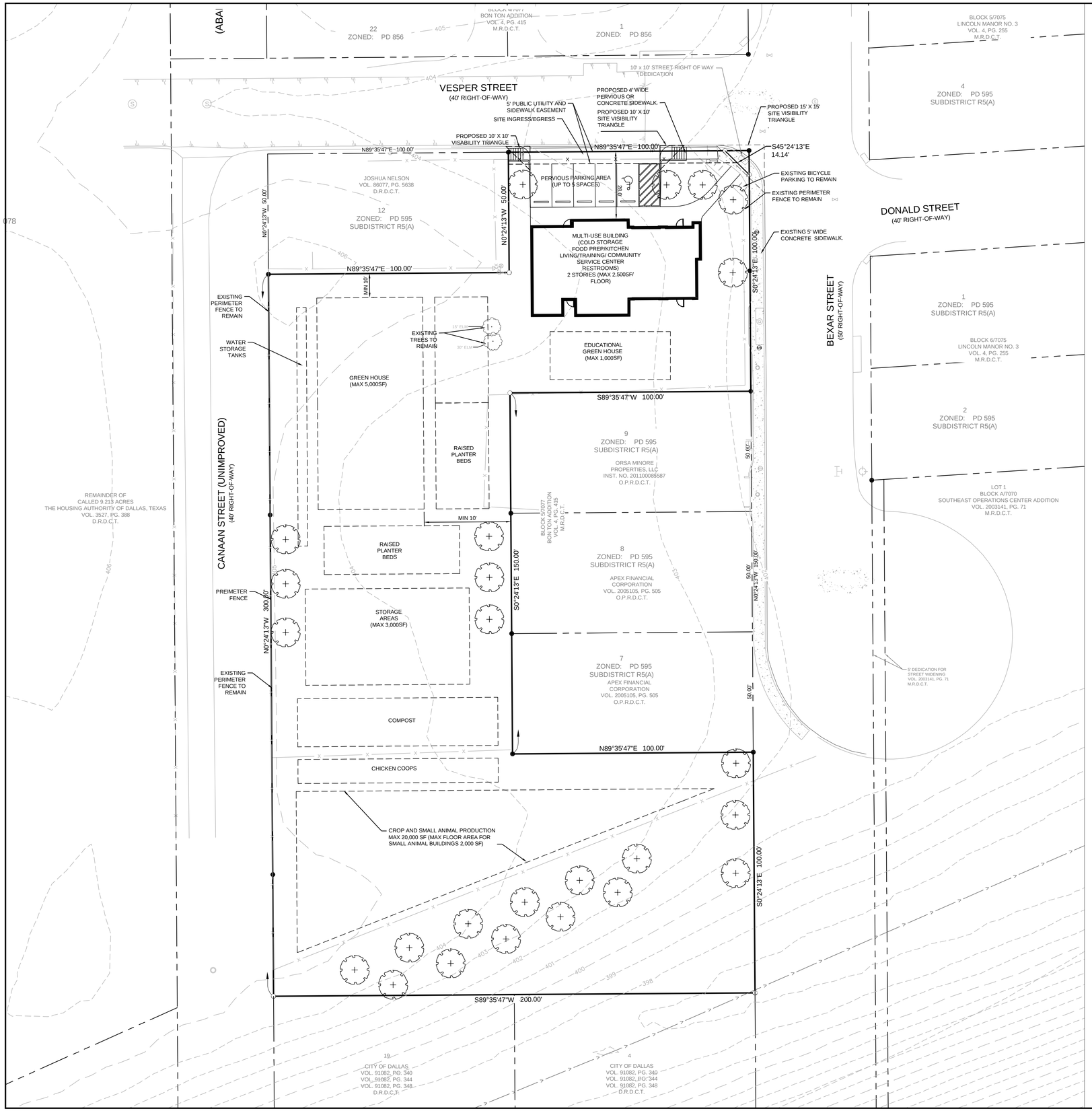


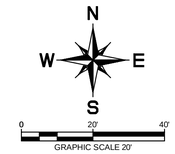


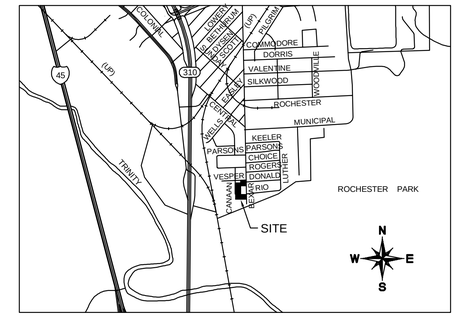


LOCATION MAP
N.T.S.

## PLANT SCHEDULE

| TREES | CODE | QTY | BOTANICAL NAME | SPECIFICATIONS | REMARKS |
|---|---|---|---|---|---|
| + | FT | 25 | Fruit Trees | 2" cal, 8` ht, 4` spr | Full, Straight, Single Leader, 50` max spacing |

## PLANTING NOTES:

1. ALL PLANT MATERIAL SHALL BE INSTALLED ACCORDING TO SOUND NURSERY PRACTICES AND SHALL MEET ALL STANDARDS AS STATED IN THE LATEST EDITION OF "AMERICAN STANDARD FOR NURSERY STOCK" BY THE AMERICAN ASSOCIATION OF NURSERYMEN.
2. NO SUBSTITUTIONS IN PLANT MATERIALS SHALL BE MADE WITHOUT WRITTEN AUTHORIZATION FROM OWNER OR LANDSCAPE ARCHITECT. IN THE EVENT OF DISCREPANCIES BETWEEN THE DRAWING AND THE PLANT LIST, THE DRAWING SHALL PREVAIL.
3. LOCATE ALL UTILITIES PRIOR TO ANY DIGGING OPERATIONS. CONTRACTOR SHALL BE RESPONSIBLE FOR ALL DAMAGES TO EXISTING UTILITIES INCURRED BY HIS WORK.
4. STAKING AND GUYING ALTERNATIVES: METHODS INDICATED IN DRAWING DETAILS ARE PREFERRED. CONTRACTOR MAY SUGGEST ALTERNATE METHODS, ASSUMING FULL RESPONSIBILITY FOR THEIR IMPLEMENTATION. CONTRACTOR SHALL REPLACE, PLANT, OR UPRIGHT ANY TREES BLOWN OVER OR DAMAGED DUE TO INADEQUATE STAKING AT NO ADDITIONAL COST TO THE OWNER.
5. ALL TREE PLANTINGS TO HAVE A 4" MULCH RING WITH A MINIMUM OF 3" SHREDDED HARDWOOD MULCH.

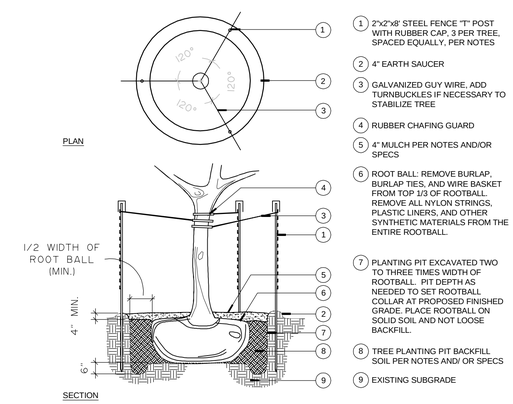


1. 2"x2"x8' STEEL FENCE "T" POST WITH RUBBER CAP, 3 PER TREE, SPACED EQUALLY, PER NOTES
2. 4" EARTH SAUCER
3. GALVANIZED GUY WIRE, ADD TURNBUCKLES IF NECESSARY TO STABILIZE TREE
4. RUBBER CHAFING GUARD
5. 4" MULCH PER NOTES AND/OR SPECS
6. ROOT BALL: REMOVE BURLAP, BURLAP TIES, AND WIRE BASKET FROM TOP 1/3 OF ROOTBALL. REMOVE ALL NYLON STRINGS, PLASTIC LINERS, AND OTHER SYNTHETIC MATERIALS FROM THE ENTIRE ROOTBALL.
7. PLANTING PIT EXCAVATED TWO TO THREE TIMES WIDTH OF ROOTBALL. PIT DEPTH AS NEEDED TO SET ROOTBALL COLLAR AT PROPOSED FINISHED GRADE. PLACE ROOTBALL ON SOLID SOIL AND NOT LOOSE BACKFILL.
8. TREE PLANTING PIT BACKFILL SOIL PER NOTES AND/ OR SPECS
9. EXISTING SUBGRADE

TREE PLANTING
N.T.S.

Kimley»Horn
5750 Genesis Court, Suite 200
Frisco, Texas 75034
Tel. No. (972) 335-3580
Fax No. (972) 335-3779
State of Texas Registration No. F-928

COMMUNITY DESIGN SERVICES

# BONTON URBAN FARM DISTRICT
BEXAR STREET AND VESPER STREET
DALLAS, TEXAS

EXHIBIT B
LANDSCAPE PLAN
FOR PD: 936

| | |
|---|---|
| Scale: | AS SHOWN |
| Designed by: | WSR |
| Drawn by: | WSR |
| Checked by: | MKW |
| Date: | 07/20/2017 |
| Project No. | 69315200 |

SHEET
1 OF 1